MANUFACTURED BY:
Backyard Discovery
3305 Airport Drive, Pittsburg, KS 66762
800-856-4445

Basepoint Business Centre: Rivermead Drive,Westlea, Swindon SN5 7EX Phone: 0800-118-2476
J.P. Coenstraat 7, The Bridge, The Hague, 2595 WP, Netherlands Phone: 0800-567-8990

MONTPELIER
Swing Set
Model # 30211G

The assembly manual must be retained
since it contains important information

WARNING
Adult Assembly Required.
Not suitable for children under 36 months due to small parts.
FOR DOMESTIC USE ONLY. INTENDED FOR OUTDOOR USE.

Please visit www.backyarddiscovery.com

For the most up to date assembly manual, to register your set, or to order replacement parts
Para obtener instrucciones en español, visite www.backyarddiscovery.com

BILT®
EASY STEP-BY-STEP
3D INTERACTIVE INSTRUCTIONS
DOWNLOAD THE FREE APP
Download on the App Store
Get it on Google play

GOCONFIGURE
Putting it all together for you
INSTALLATION SERVICES AVAILABLE!*
See inside for details

Made in China
INS-30211G-A-MONTPELIER EN-71-ENG 4/25/23

Owner's Manual - Basic Setup Dimensions & Assembly Notes

Place the set on level ground, not less than 6'-7" [2 m] from any structure or obstruction such as a fence, garage, house, overhanging branches, laundry lines, or electrical wires.

- While assembling unit, take time before and after each phase to make sure fort is level. If fort is not level, assembly will be difficult and improper assembly may result. Extra care must be taken to insure the fort is square.
- The safe play area refers to a zone extending 6'-7" (2 m) beyond the play product on all sides, including the space above the play product.

SAFE PLAY AREA DIAGRAM

Ground Dimensions

16'-1" [4.9] x 15'-5 3/4" [4.7] x 9'-4 1/4" [2.8]

Safe Play Area

29'-3" [8.9] x 28'-7 3/4" [8.7] x 15'-11 1/4" [4.9]

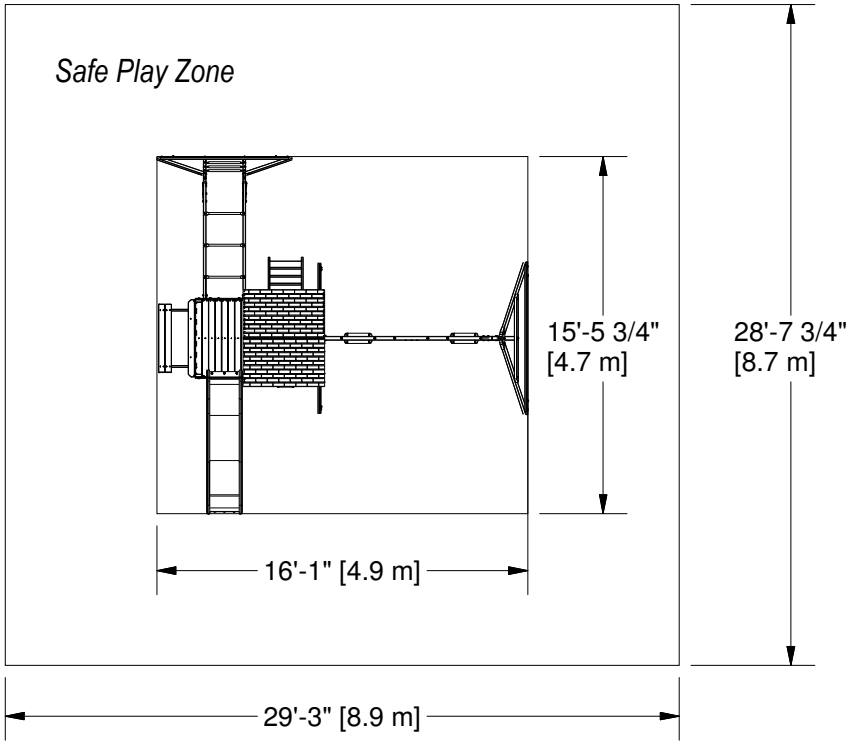

SAFE PLAY HEIGHT: 15'-11 1/4" [4.9 m]
MAXIMUM FALL HEIGHT: 6' 3" [1.9 m]

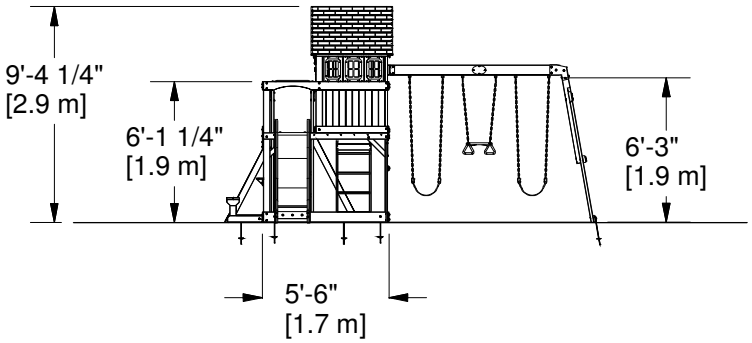

General Information:

Your set has been designed and engineered for children only and for residential use only.
A maximum of 150 lbs. per child is recommended for play activities designed for individual use.
A maximum of 120 lbs. per child is recommended for play activities designed for multiple child use.
A maximum of 9 children is recommended for this swing set.

Owner's Manual - Parts Identification

Wood Components (Not to Scale)

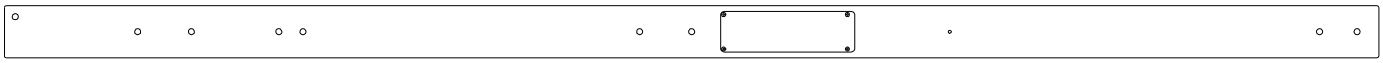

E1 (x1) | **UPRIGHT - W2A03132**
1 3/8"x3 3/8"x89 1/2" (36x86x2274)

E2 (x1) | **UPRIGHT - W4L14532**
1 3/8"x3 3/8"x73 1/8" (36x86x1856)

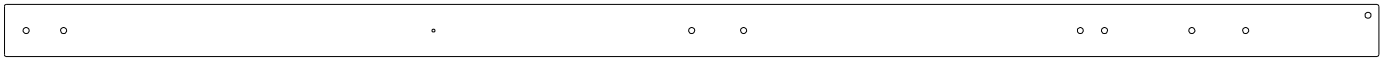

E3 (x1) | **UPRIGHT - W4L14533**
1 3/8"x3 3/8"x89 1/2" (36x86x2274)

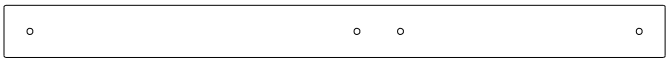

E4 (x1) | **CLUB HOUSE LEG - W4L14534**
1 3/8"x3 3/8"x43 1/8" (36x86x1094)

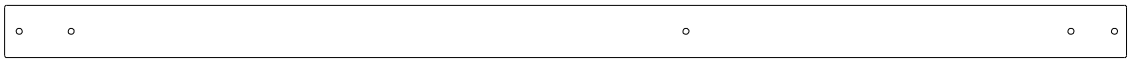

E5 (x1) | **UPRIGHT - W4L14535**
1 3/8"x3 3/8"x73 1/8" (36x86x1856)

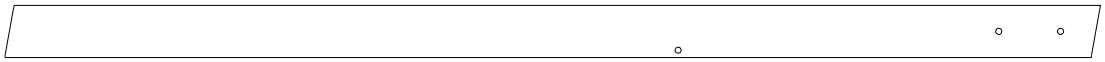

E6 (x2) | **MONKEY BAR UPRIGHT - W4L14536**
1 3/8"x3 3/8"x71 3/8" (36x86x1812)

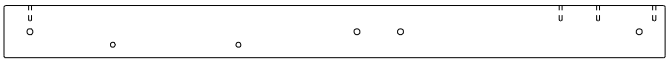

E8 (x1) | **CLUB HOUSE LEG - W4L14537**
1 3/8"x3 3/8"x43 1/8" (36x86x1094)

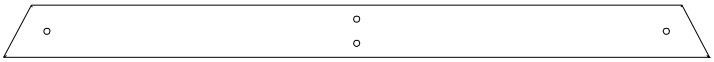

E50 (x1) | **END SUPPORT - W4L14538**
1 1/2"x3 1/2"x46" (36x86x1168)

E71 (x2) | **MONKEY BAR RAIL - W4L14539**
1 3/8"x3 3/8"x60 5/8" (36x86x1539)

E77 (x2) | **ANGLE BRACE - W4L14540**
1 3/8"x3 3/8"x81" (36x86x2056)

F1 (x6) | **DECK BRACE - W4L14541**
1"x2 3/8"x15 3/4" (24x60x400)

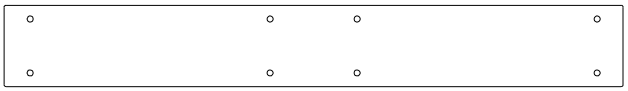

G1 (x1) | **SWING BEAM MOUNT - W4L14542**
1"x5 1/4"x40 3/8" (24x134x1024)

G2 (x2) | **WALL RAIL - W4L14611**
1"x4 3/8"x40 3/4" (24x112x1034)

H1 (x2) | **TABLE SUPPORT - W4L14543**
1"x2"x4" (24x51x102)

Owner's Manual - Parts Identification

Wood Components (Not to Scale)

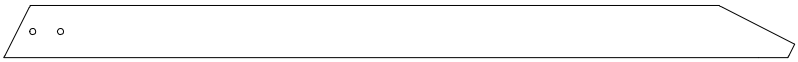

H2 (x2) | **MONKEY BAR BRACE - W4L14544**
1"x3 3/8"x51 1/2" (24x86x1308 mm)

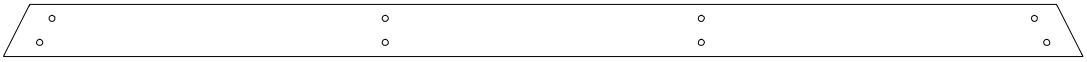

H3 (x1) | **MONKEY BAR GROUND BOARD - W4L14545**
1"x3 3/8"x70 3/8" (24x86x1786)

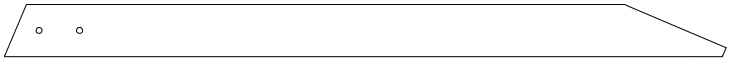

H6 (x2) | **ANGLE BRACE - W4L14549**
15/16"x3 3/8"x47" (24x86x1194)

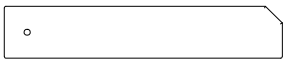

H7 (x2) | **BENCH GROUND BOARD - W4L14546**
1"x3 3/8"x18 1/8" (24x86x460)

H8 (x2) | **BENCH UPRIGHT - W4L14547**
1"x3 3/8"x11 3/4" (24x86x300)

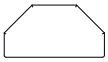

H9 (x2) | **BENCH SEAT SUPPORT - W4L14548**
1"x3 3/8"x6 1/2" (24x86x166)

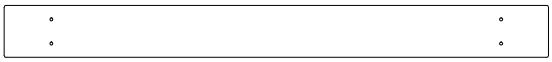

H11 (x2) | **BENCH SEAT - W4L14555**
1"x3 3/8"x35 3/8" (24x86x900)

H74 (x1) | **LEFT UPRIGHT - W4L17611**
1 3/8"x3 3/8"x50 3/4" (36x86x1290)

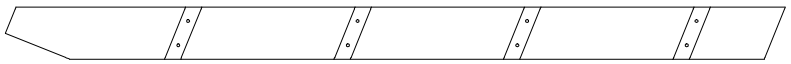

H75 (x1) | **RIGHT UPRIGHT - W4L17612**
1 3/8"x3 3/8"x50 3/4" (36x86x1290)

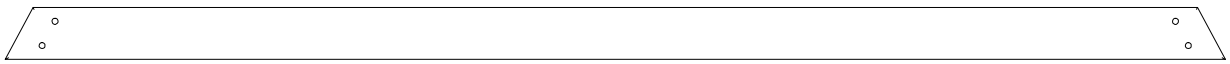

H80 (x1) | **GROUND BOARD - W4L14552**
1"x3 3/8"x79 1/2" (24x86x2018)

H81 (x4) | **LADDER RUNG - W4L14554**
1"x3 3/8"x17 1/8" (24x86x434)

H82 (x1) | **ATTACHMENT BOARD - W4L17613**
1"x3 3/8"x19 1/8" (24x86x486)

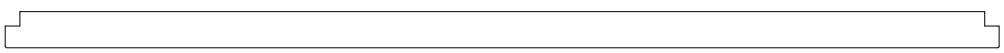

J1 (x1) | **JOIST - W4L14556**
1"x2 3/8"x64 3/4" (24x60x1644)

Owner's Manual - Parts Identification

Wood Components (Not to Scale)

K1 | **GROUND BOARD - W4L14557**
(x2) | *5/8"x5 1/4"x64 3/4" (16x134x1644)*

K2 | **GROUND BOARD - W4L14558**
(x1) | *5/8"x5 1/4"x40 3/8" (16x134x1024)*

K3 | **FLOOR SUPPORT - W4L14559**
(x1) | *5/8"x5 1/4"x40 3/8" (16x134x1024)*

K4 | **GROUND BOARD - W4L14560**
(x1) | *5/8"x5 1/4"x78 1/4" (16x134x1986)*

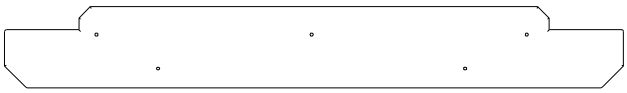

K5 | **COUNTER TOP - W4L14561**
(x1) | *5/8"x5 1/4"x40 3/8" (16x134x1024)*

K6 | **WALL BOARD - W4L14562**
(x1) | *5/8"x5 1/4"x16 1/4" (16x134x412)*

L1 | **WALL RAIL - W4L14563**
(x1) | *5/8"x4 3/8"x40 3/8" (16x112x1024)*

L2 | **WALL RAIL - W4L14564**
(x1) | *5/8"x4 3/8"x64 3/4" (16x112x1644)*

L3 | **WALL RAIL - W4L14565**
(x1) | *5/8"x4 3/8"x64 3/4" (16x112x1644)*

L4 | **WALL RAIL - W4L14566**
(x1) | *5/8"x4 3/8"x40 3/8" (16x112x1024)*

L5 | **CLUB HOUSE WALL RAIL - W4L14567**
(x1) | *5/8"x4 3/8"x40 3/8" (16x112x1024)*

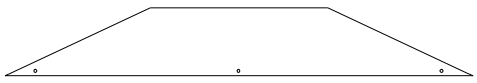

L6 | **BAY WINDOW HEADER - W4L14568**
(x2) | *5/8"x4 3/8"x30 1/2" (16x112x774)*

Owner's Manual - Parts Identification

Wood Components (Not to Scale)

L7 | **DOOR BOARD - W4L14569**
(x1) | *5/8"x4 3/8"x35" (16x110x890)*

L8 | **DOOR BOARD - W4L14570**
(x1) | *5/8"x4 3/8"x35" (16x110x890)*

M1 | **FLOOR SUPPORT - W4L14571**
(x1) | *5/8"x3 3/8"x64 3/4" (16x86x1644)*

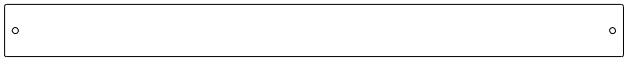

M2 | **FLOOR SUPPORT - W4L14572**
(x2) | *5/8"x3 3/8"x40 3/8" (16x86x1024)*

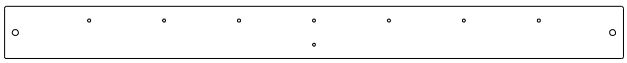

M3 | **FLOOR SUPPORT - W4L14573**
(x1) | *5/8"x3 3/8"x40 3/8" (16x86x1024)*

M4 | **FLOOR BOARD - W4L14574**
(x2) | *5/8"x3 3/8"x40 3/8" (16x86x1024)*

M5 | **FLOOR BOARD - W4L14575**
(x1) | *5/8"x3 3/8"x40 3/8" (16x86x1024)*

M6 | **FLOOR BOARD - W4L14576**
(x1) | *5/8"x3 3/8"x37 1/2" (16x86x952)*

M7 | **FLOOR SUPPORT - W4L14577**
(x1) | *5/8"x3 3/8"x40 3/8" (16x86x1024)*

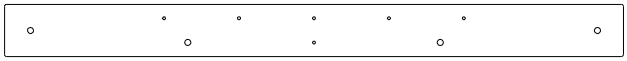

M8 | **FLOOR SUPPORT - W4L14578**
(x1) | *5/8"x3 3/8"x40 3/8" (16x86x1024)*

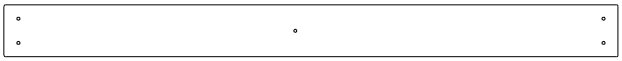

M9 | **WALL BOARD - W4L14579**
(x2) | *5/8"x3 3/8"x40" (16x86x1016)*

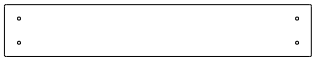

M10 | **WALL BOARD - W4L14580**
(x9) | *5/8"x3 3/8"x20" (16x86x508)*

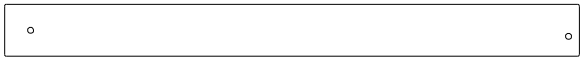

M11 | **FLOOR SUPPORT - W4L14581**
(x1) | *5/8"x3 3/8"x37 1/2" (16x86x951)*

M12 | **WALL BOARD - W4L14582**
(x9) | *5/8"x3 3/8"x38 7/8" (16x86x986)*

Owner's Manual - Parts Identification

Wood Components (Not to Scale)

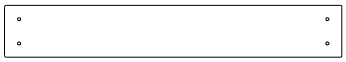

M13 (x9) | **WALL BOARD - W4L14583**
5/8"x3 3/8"x22" (16x86x558)

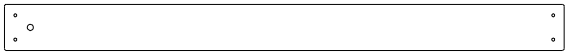

M14 (x1) | **WALL BOARD - W4L14584**
5/8"x3"x36 1/2" (16x76x926)

M15 (x2) | **WALL RAIL - W4L14585**
5/8"x3 3/8"x8 1/2" (16x86x216)

M16 (x2) | **WALL RAIL - W4L14586**
5/8"x3 3/8"x40 3/8" (16x86x1024)

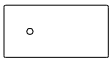

M17 (x1) | **WALL RAIL - W4L14587**
5/8"x3 3/8"x6 3/4" (16x86x173)

M18 (x1) | **WALL RAIL - W4L14588**
5/8"x3 3/8"x4 3/4" (16x86x122)

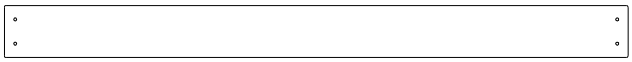

M19 (x2) | **WALL BOARD - W4L14589**
5/8"x3 3/8"x40 5/8" (16x86x1032)

M20 (x2) | **WALL BOARD - W4L14590**
5/8"x3 3/8"x16 1/4" (16x86x412)

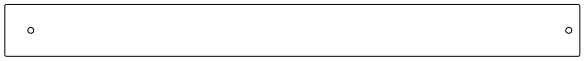

M21 (x2) | **WALL RAIL - W4L14591**
5/8"x3 3/8"x37 1/2" (16x86x951)

M22 (x1) | **WALL BOARD - W4L14592**
5/8"x2 7/8"x38 7/8" (16x73x986)

M23 (x2) | **DOOR BOARD - W4L14593**
5/8"x3 3/8"x35 3/4" (16x86x908)

M24 (x2) | **DOOR BOARD - W4L14594**
5/8"x3 3/8"x21 1/4" (16x86x540)

M25 (x2) | **DOOR BOARD - W4L14595**
5/8"x3 3/8"x6 1/4" (16x86x160)

M26 (x8) | **WALL BOARD - W4L14596**
5/8"x3 3/8"x3 1/2" (16x86x88)

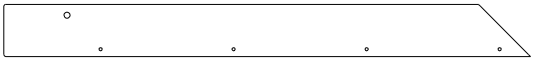

M27 (x4) | **ROOF RAFTER - W4L14597**
5/8"x3 3/8"x34 1/4" (16x86x871)

Owner's Manual - Parts Identification

Wood Components (Not to Scale)

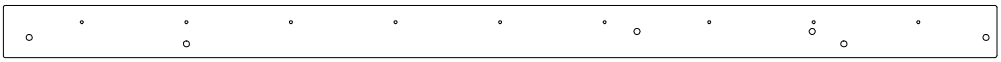

M30 (x1) | **FLOOR SUPPORT - W4L14598**
5/8"x3 3/8"x64 3/4" (16x86x1644)

M31 (x2) | **GABLE BOARD - W4L14599**
5/8"x3 3/8"x31 1/2" (16x86x800)

M33 (x1) | **WALL BOARD - W4L14600**
5/8"x3"x36 1/2" (16x76x926)

M34 (x1) | **FILLER BOARD - W4L14617**
5/8"x1 3/4"x33 1/2" (16x45x851)

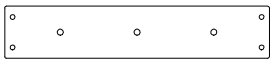

M77 (x1) | **SLIDE BRACE - W4L08748**
5/8"x3 3/8"x17 1/4" (16x86x438)

M78 (x2) | **CENTER SLIDE BRACE - W4L08749**
5/8"x3 3/8"x17 1/4" (16x86x438)

M102 (x1) | **REAR SUPPORT - W4L17614**
5/8"x3 3/8"x19 1/8" (16x86x486)

N1 (x1) | **SAFETY BOARD - W4L14602**
5/8"x2 3/8"x40 3/8" (16x60x1024)

N2 (x6) | **PICKET - W4L14603**
5/8"x2 3/8"x22" (16x60x558)

N3 (x1) | **WALL BOARD - W4L14604**
5/8"x2"x22" (16x50x558)

N4 (x6) | **BAY WINDOW BOARD - W4L14605**
5/8"x2 3/8"x13 1/8" (16x60x332)

N5 (x6) | **BAY WINDOW BOARD - W4L14606**
5/8"x2 3/8"x6 1/4" (16x60x158)

N7 (x1) | **BENCH CLEAT - W4L14607**
5/8"x2 3/8"x5 1/8" (16x60x130)

N9 (x1) | **DOOR STOP - W4L14608**
5/8"x2 3/8"x8 3/4" (16x60x222)

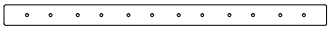

O1 (x3) | **DOOR CLEAT - W4L14609**
5/8"x1 3/8"x21" (16x34x534)

O2 (x2) | **WALL BOARD - W4L14610**
5/8"x1 3/8"x15 1/2" (16x34x395)

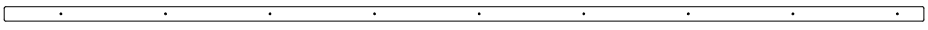

S1 (x2) | **FLOOR SUPPORT - W4L14612**
1"x1"x59 7/8" (24x24x1522)

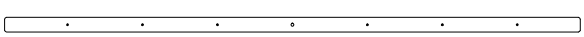

S2 (x1) | **FLOOR SUPPORT - W4L14613**
1"x1"x37 1/2" (24x24x952)

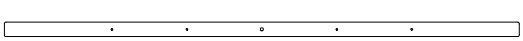

S3 (x1) | **FLOOR SUPPORT - W4L14614**
1"x1"x33 1/2" (24x24x852)

Owner's Manual - Parts Identification

Wood Components (Not to Scale)

SB74 (x1) | **SWING BEAM EXTENDED - W4L06925**
2"x5 1/4"x89 1/2" (50x134x2274)

W71 (x1) | **SWING BEAM SUPPORT - W4L14615**
2"x3 3/8"x50 3/8" (50x86x1280)

Y1 (x2) | **WALL BOARD - W4L14616**
5/8"x4"x34 5/8" (16x102x880)

FP1 (x3) | **FLOOR PANEL - W2A03131**
1 1/4"x17"x40 5/16" (32x432x1024)

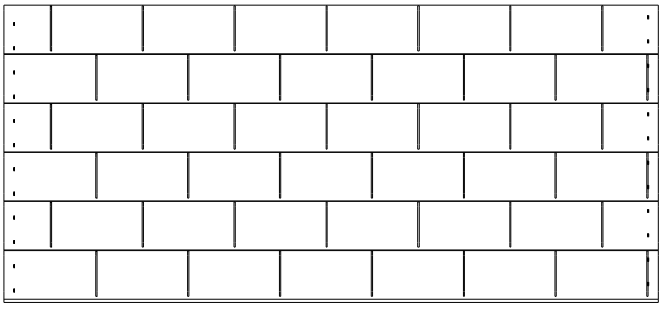

RP1 (x2) | **ROOF PANEL - W2A03133**
1 1/16"x19 5/16"x42 5/8" (35x491x1083)

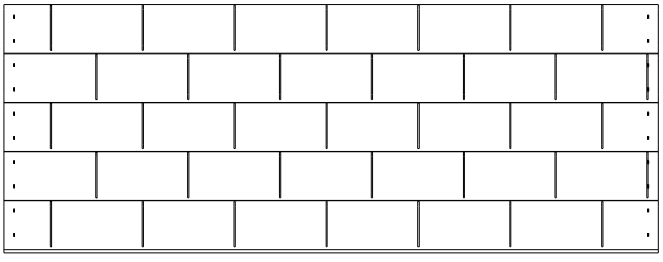

RP2 (x2) | **ROOF PANEL - W2A03134**
1 1/16"x16 1/8"x42 5/8" (35x410x1083)

Owner's Manual - Parts Identification

Hardware Components

H100480 | **BOLT WH BLK**
(x2) | *5/16x4 3/4*

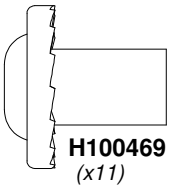

H100469 | **NUT BARREL WH BLK**
(x11) | *5/16x5/8*

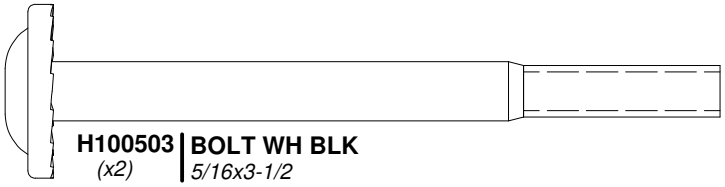

H100503 | **BOLT WH BLK**
(x2) | *5/16x3-1/2*

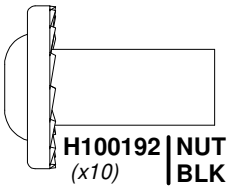

H100192 | **NUT BARREL WH BLK**
(x10) | *5/16x7/8*

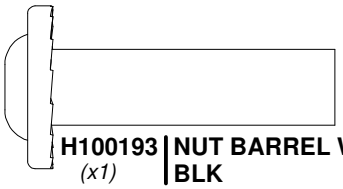

H100193 | **NUT BARREL WH BLK**
(x1) | *5/16x1-1/2*

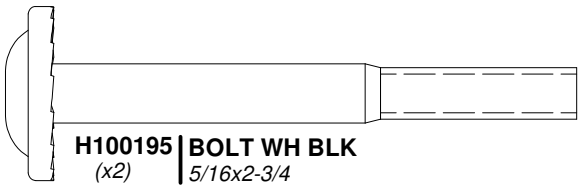

H100195 | **BOLT WH BLK**
(x2) | *5/16x2-3/4*

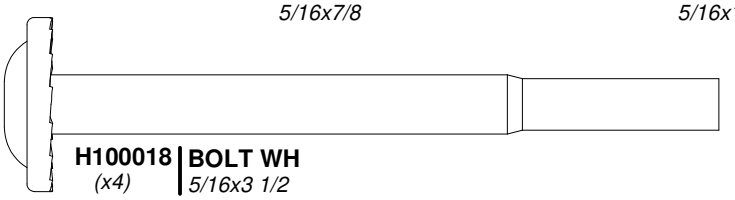

H100018 | **BOLT WH**
(x4) | *5/16x3 1/2*

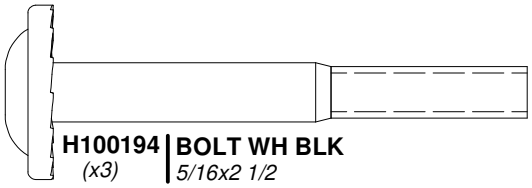

H100194 | **BOLT WH BLK**
(x3) | *5/16x2 1/2*

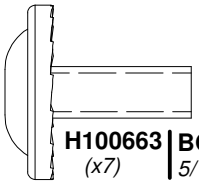

H100663 | **BOLT WH BLK**
(x7) | *5/16x3/4*

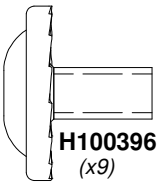

H100396 | **BOLT WH BLK**
(x9) | *5/16x1/2*

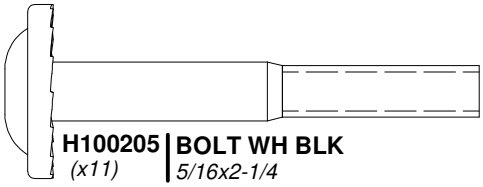

H100205 | **BOLT WH BLK**
(x11) | *5/16x2-1/4*

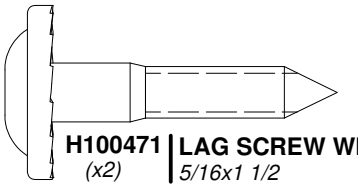

H100471 | **LAG SCREW WH BLK**
(x2) | *5/16x1 1/2*

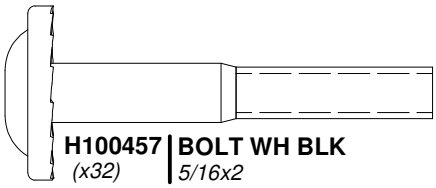

H100457 | **BOLT WH BLK**
(x32) | *5/16x2*

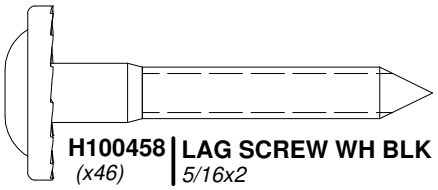

H100458 | **LAG SCREW WH BLK**
(x46) | *5/16x2*

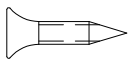

H100624 | **SCREW PFH BLK**
(x13) | *6x5/8*

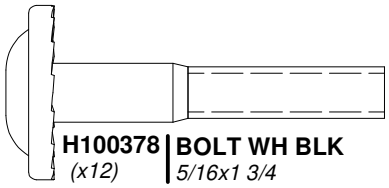

H100378 | **BOLT WH BLK**
(x12) | *5/16x1 3/4*

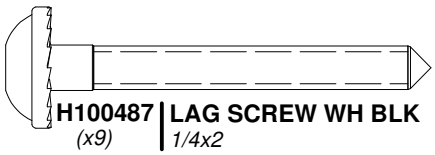

H100487 | **LAG SCREW WH BLK**
(x9) | *1/4x2*

H100472 | **BOLT HEX BLK**
(x9) | *5/16x2 3/4*

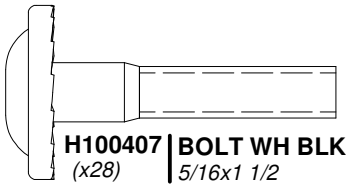

H100407 | **BOLT WH BLK**
(x28) | *5/16x1 1/2*

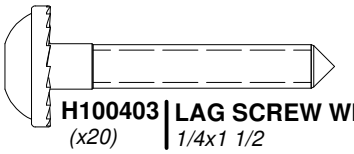

H100403 | **LAG SCREW WH BLK**
(x20) | *1/4x1 1/2*

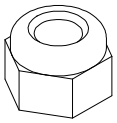

H100479 | **NUT LOCK BLK**
(x4) | *5/16*

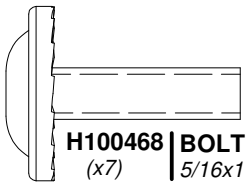

H100468 | **BOLT WH BLK**
(x7) | *5/16x1*

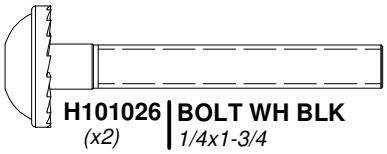

H101026 | **BOLT WH BLK**
(x2) | *1/4x1-3/4*

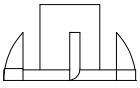

H100398 | **T-NUT BLK**
(x2) | *1/4*

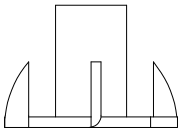

H100379 | **T-NUT BLK**
(x92) | *5/16*

Owner's Manual - Parts Identification

Hardware Components

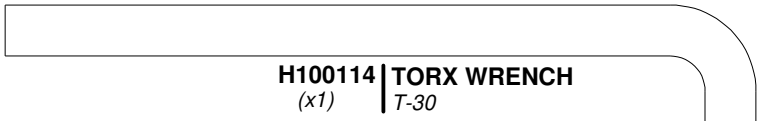

H100114 | **TORX WRENCH**
(x1) | *T-30*

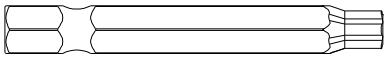

H100147 | **TORX BIT**
(x1) | *T-30*

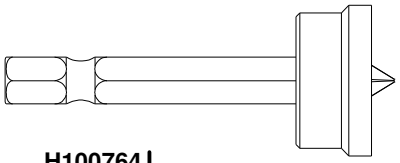

H100764 | **SCREW SETTER**
(x1)

H100090 | **SCREW PFH**
(x48) | *8x2 1/2"*

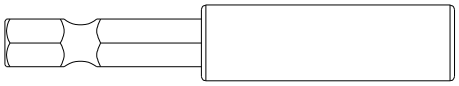

H101100 | **MAGNETIC DRIVER**
(x1)

H100111 | **SCREW PFH**
(x7) | *8x2*

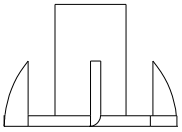

H100074 | **T-NUT**
(x11) | *5/16*

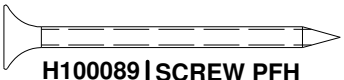

H100089 | **SCREW PFH**
(x33) | *8x1 3/4*

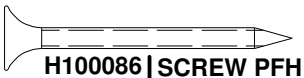

H100086 | **SCREW PFH**
(x144) | *8x1 1/2*

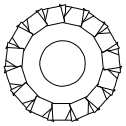

H100405 | **WASHER LOCK EXT BLK**
(x17) | *6x15*

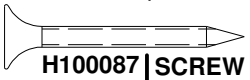

H100087 | **SCREW PFH**
(x8) | *8x1 1/4*

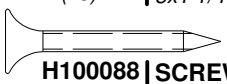

H100088 | **SCREW PFH**
(x283) | *8x1 1/8*

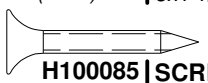

H100085 | **SCREW PFH**
(x4) | *8x1*

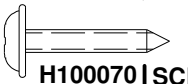

H100070 | **SCREW PWH**
(x35) | *8x3/4*

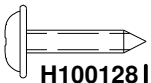

H100128 | **SCREW PWH**
(x4) | *8x5/8*

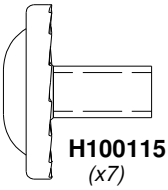

H100115 | **BOLT WH**
(x7) | *5/16x1/2*

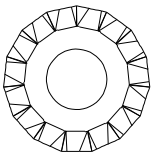

H100198 | **WASHER LOCK EXT BLK**
(x110) | *8x19*

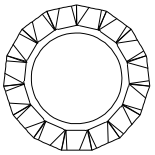

H100199 | **WASHER LOCK EXT BLK**
(x15) | *12x19*

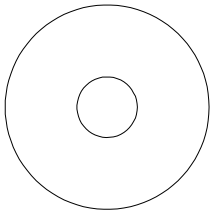

H100105 | **WASHER FLAT**
(x7) | *8x27*

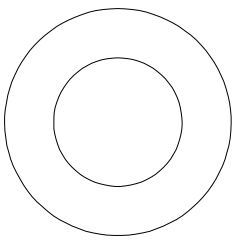

H100103 | **WASHER SAFETY**
(x7) | *17x30*

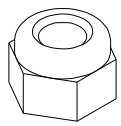

H100110 | **NUT LOCK**
(x7) | *5/16*

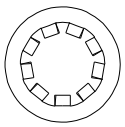

H100473 | **WASHER LOCK INT BLK**
(x2) | *8x15*

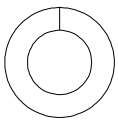

H100477 | **WASHER SPLIT BLK**
(x4) | *5/16*

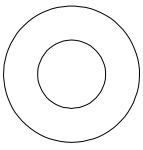

H100474 | **WASHER FLAT BLK**
(x2) | *9x18*

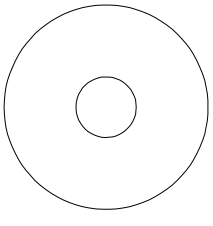

H100478 | **WASHER FLAT BLK**
(x11) | *8x27*

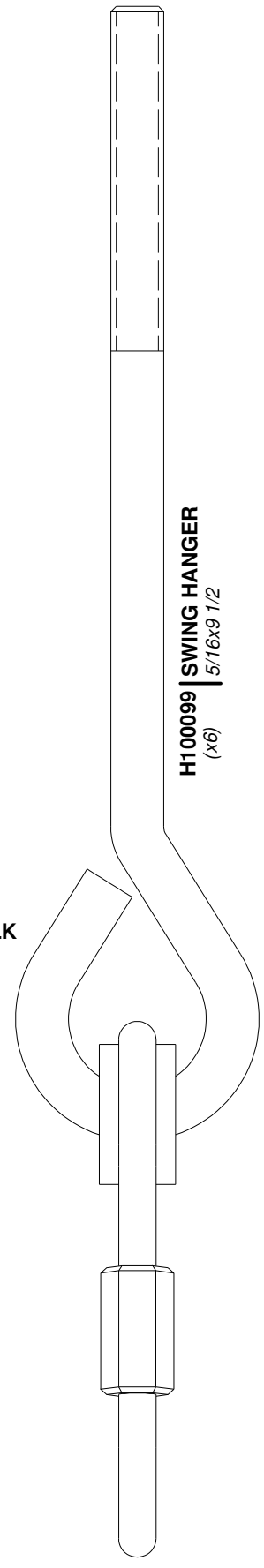

H100099 | **SWING HANGER**
(x6) | *5/16x9 1/2*

Owner's Manual - Parts Identification

Accessory Components (Not to Scale)

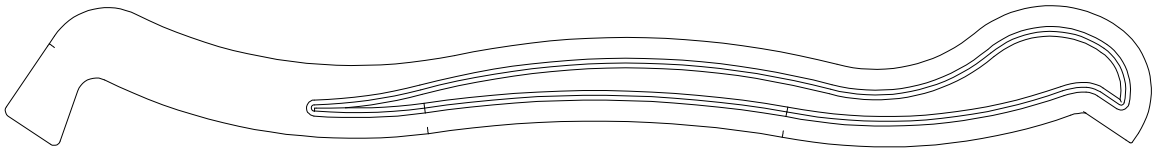

A100055 *(x1)* | **SLIDE RAIL 8' GREEN LEFT**

A100054 *(x1)* | **SLIDE RAIL 8' GREEN RIGHT**

A100356 *(x1)* | **SLIDE BED 8' LIGHT GREEN**

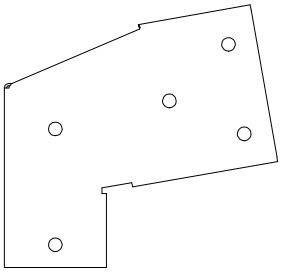

A100326 *(x1)* | **SWING BEAM EXTENSION BRACKET-RIGHT**

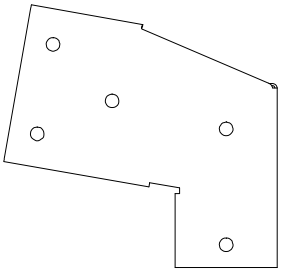

A100325 *(x1)* | **SWING BEAM EXTENSION BRACKET-LEFT**

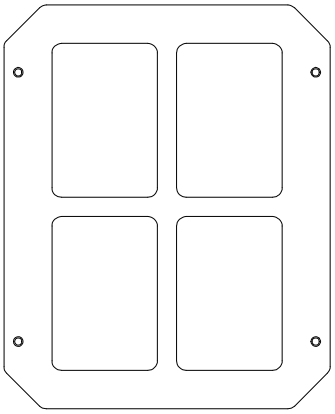

A100014 *(x6)* | **PLASTIC WINDOW WHITE**

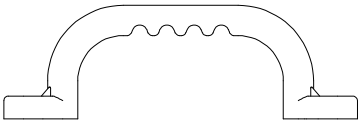

A100028 *(x4)* | **HAND GRIP GREEN PLASTIC**

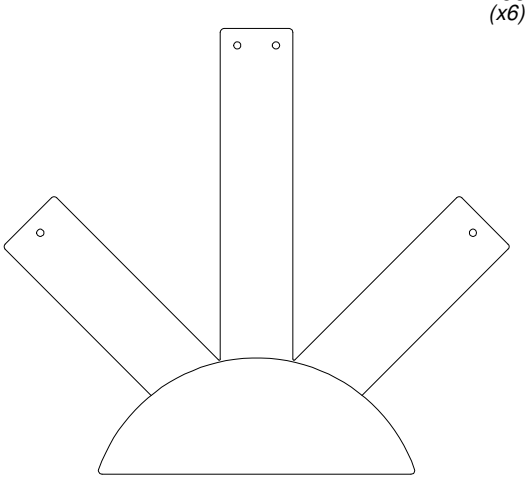

A100361 *(x2)* | **PLASTIC SUNBURST**

A100164 *(x1)* | **BYD ID TAG (LARGE) AGES 3-10**

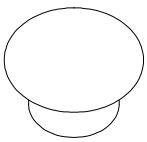

A6P00122 *(x1)* | **KNOB - LT BROWN**

Owner's Manual - Parts Identification

Accessory Components (Not to Scale)

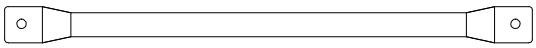

A100045 (x6) | METAL RUNG 559 GREEN

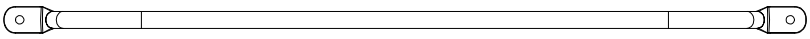

A100134 (x2) | HAND GRIP GREEN 816 C/C

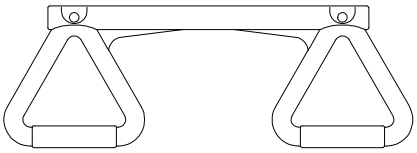

A6P00034 (x1) | TRAPEZE YELLOW

A6P00397 (x2) | ROPE-CHAIN GREEN / SEAT GREEN

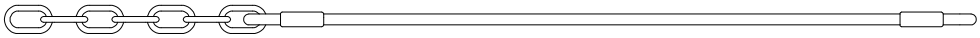

A100083 (x2) | ROPE-CHAIN GREEN 33"

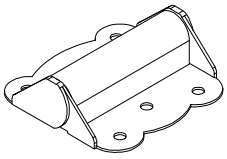

A4M00624 (x2) | HINGE (DOOR, SPRING LOADED)

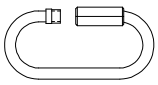

A100069 (x2) | QUICK LINK

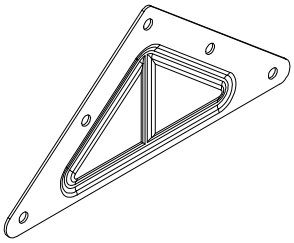

A100294 (x2) | TRIANGLE PLATE 100° 5 HOLE

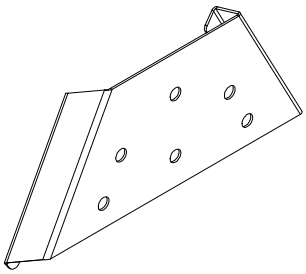

A4M01169 (x1) | A-FRAME BRACKET

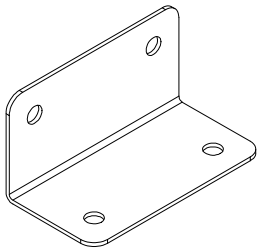

A100140 (x2) | L BRACKET 66x66x127

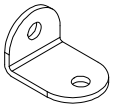

A100061 (x2) | L BRACKET GREEN 32x51

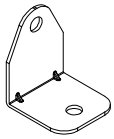

A100053 (x2) | L BRACKET 54x67 - GRN

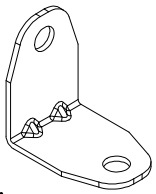

A4M01046 (x4) | L BRACKET 2.5x38x55x55

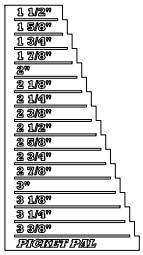

A6P00410 (x1) | PICKET PAL

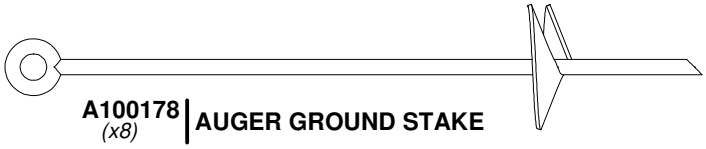

A100178 (x8) | AUGER GROUND STAKE

PRE-ASSEMBLY STEP 1 - SORTING PARTS

It is critical for ease of assembly that you take the time to sort and organize the wood and hardware.

WOOD PARTS:

- **Organize wood parts by the three-digit, alpha-numeric number stamped on each board (ex. P01).**
- **If there are multiple boards with the same stamped number, stack those pieces together.**
- **Stamps can be found on the flat surface of the boards or on the end of the boards.**
- **Allow yourself plenty of room - the wood pieces can take up a significant amount of space.**

NOTE: CARTONS ARE NOT ORGANIZED BY BOARD NUMBER.

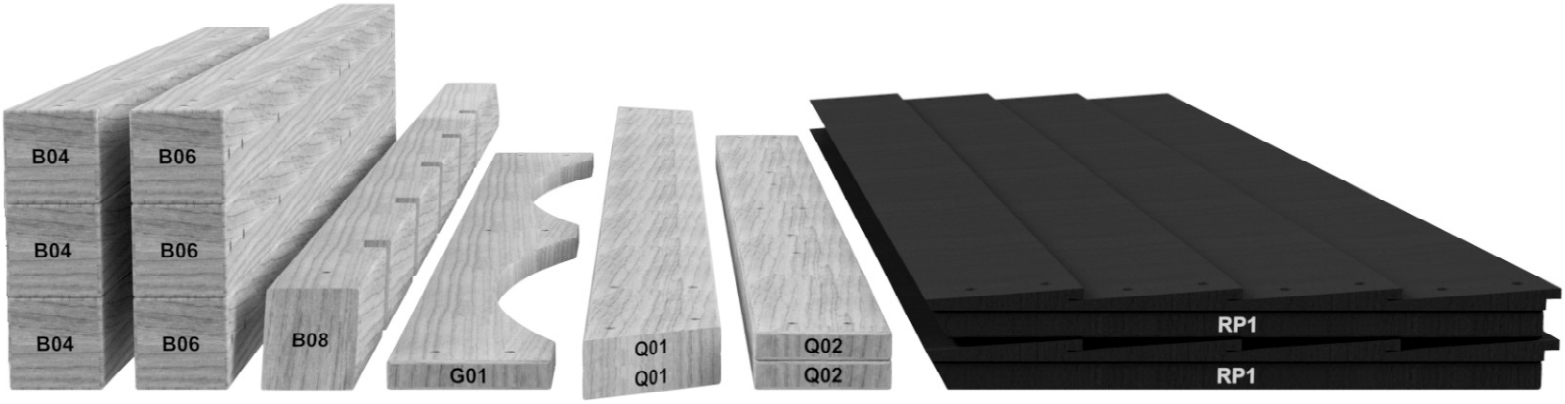

HARDWARE PARTS:

- **We recommend that you have a separate table to organize the hardware.**
- **Hardware bags are printed with a seven-digit, alpha-numeric part number.**
- **You can organize your hardware by part number or group by hardware type (i.e. bolts, nuts, etc.).**
- **During assembly you only need to reference the last four digits of the number.**

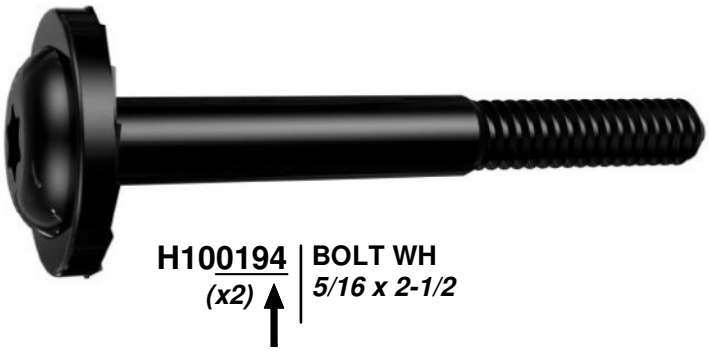

H100194 | **BOLT WH**
(x2) | ***5/16 x 2-1/2***

PRE-ASSEMBLY STEP 2 - TOOLS REQUIRED

Cordless Drill or
Electric Drill

Drill Attachments:
Phillips Head

1/8", 3/16", 3/8" & 7/16"
Drill Bits

Phillips Screw Driver

Open End Wrenches 1/2" & 9/16"

3/8" Drive Ratchet, 1/2" &
9/16" STD Sockets 1/2" & 9/16" Deep
Sockets

Claw Hammer

Rubber Mallet - Optional

Tape Measure

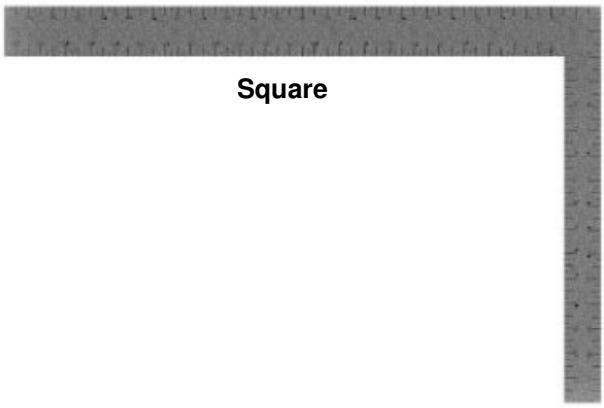

Square

Level 24"

PRE-ASSEMBLY STEP 3 - CHOOSE YOUR ASSEMBLY METHOD

There are several types of assembly instructions available to you.

1. **Printed Assembly Manual included with your set**
2. **BILT APP - 3D interactive instructions**
3. **Combination of the Printed Manual and BILT APP (Note: Step numbers can differ between the two methods)**

STEP 1 - LADDER ASSEMBLY

QTY	PART NUMBER	DESCRIPTION
8	H100090	SCREW PFH 8x2 1/2

H74 (x1) | **LEFT UPRIGHT - W4L17611**
1 3/8"x3 3/8"x50 3/4" (36x86x1290)

H81 (x4) | **LADDER RUNG - W4L14554**
1"x3 3/8"x17 1/8" (24x86x434)

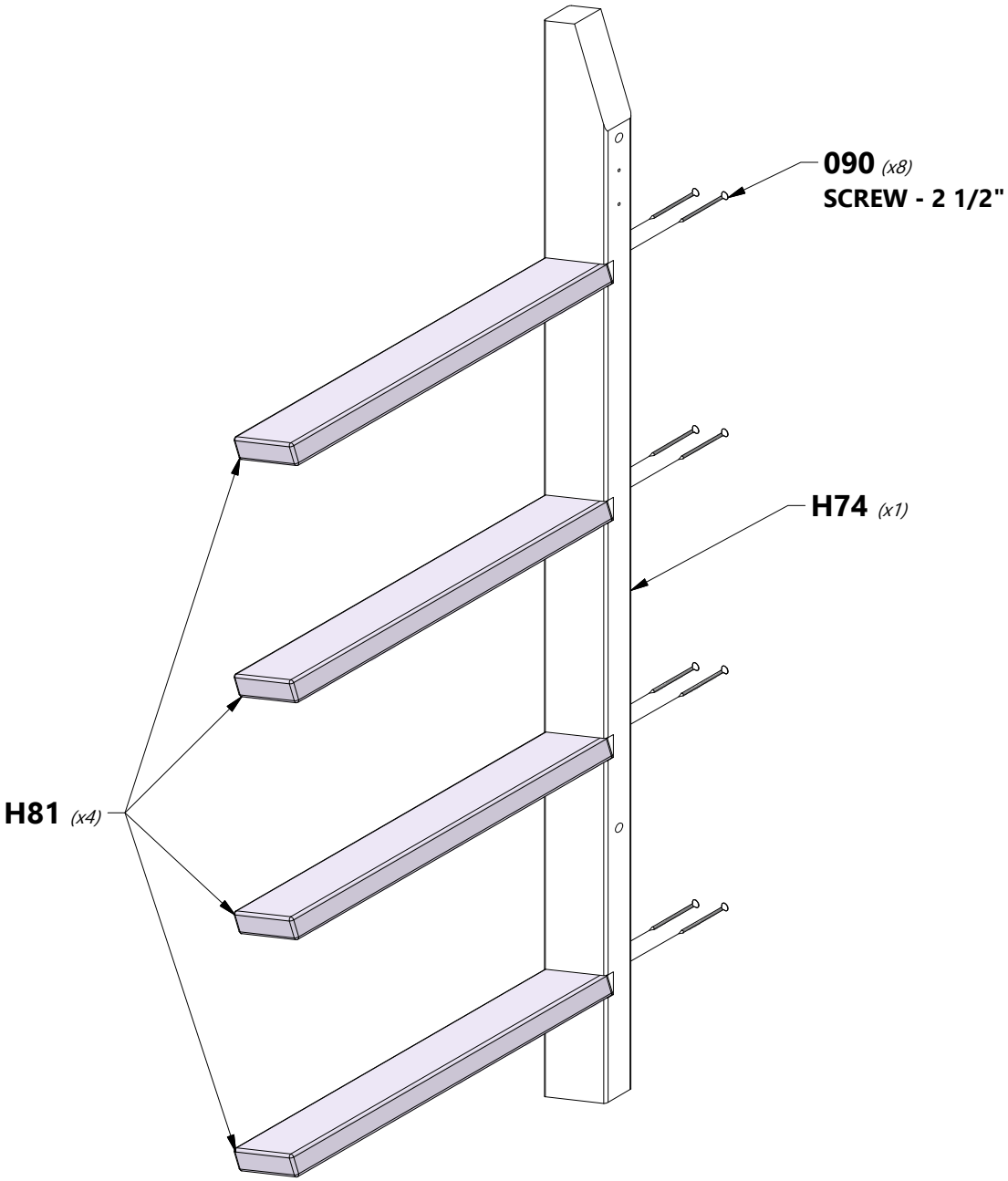

STEP 2 - LADDER ASSEMBLY

QTY	PART NUMBER	DESCRIPTION
8	H100090	SCREW PFH 8x2 1/2

H75 *(x1)* | **RIGHT UPRIGHT - W4L17612**
1 3/8"x3 3/8"x50 3/4" (36x86x1290)

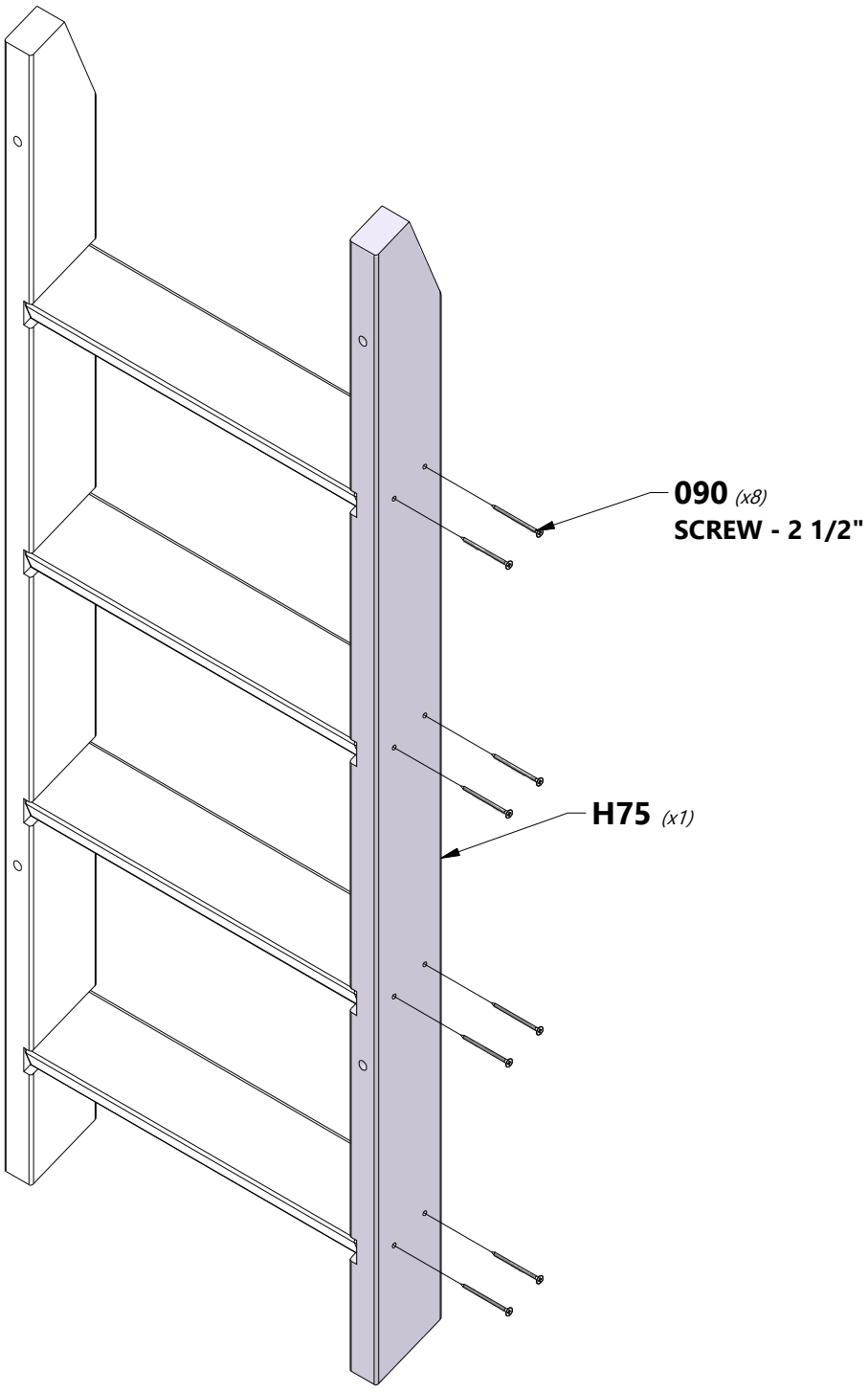

STEP 3 - LADDER ASSEMBLY

QTY	PART NUMBER	DESCRIPTION
4	H100086	SCREW PFH 8x1-1/2"
4	H100089	SCREW PFH 8x1-3/4"

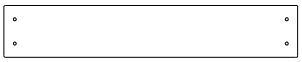

M102 *(x1)* | **REAR SUPPORT - W4L17614**
5/8"x3 3/8"x19 1/8" (16x86x486)

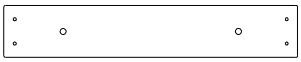

H82 *(x1)* | **ATTACHMENT BOARD - W4L17613**
1"x3 3/8"x19 1/8" (24x86x486)

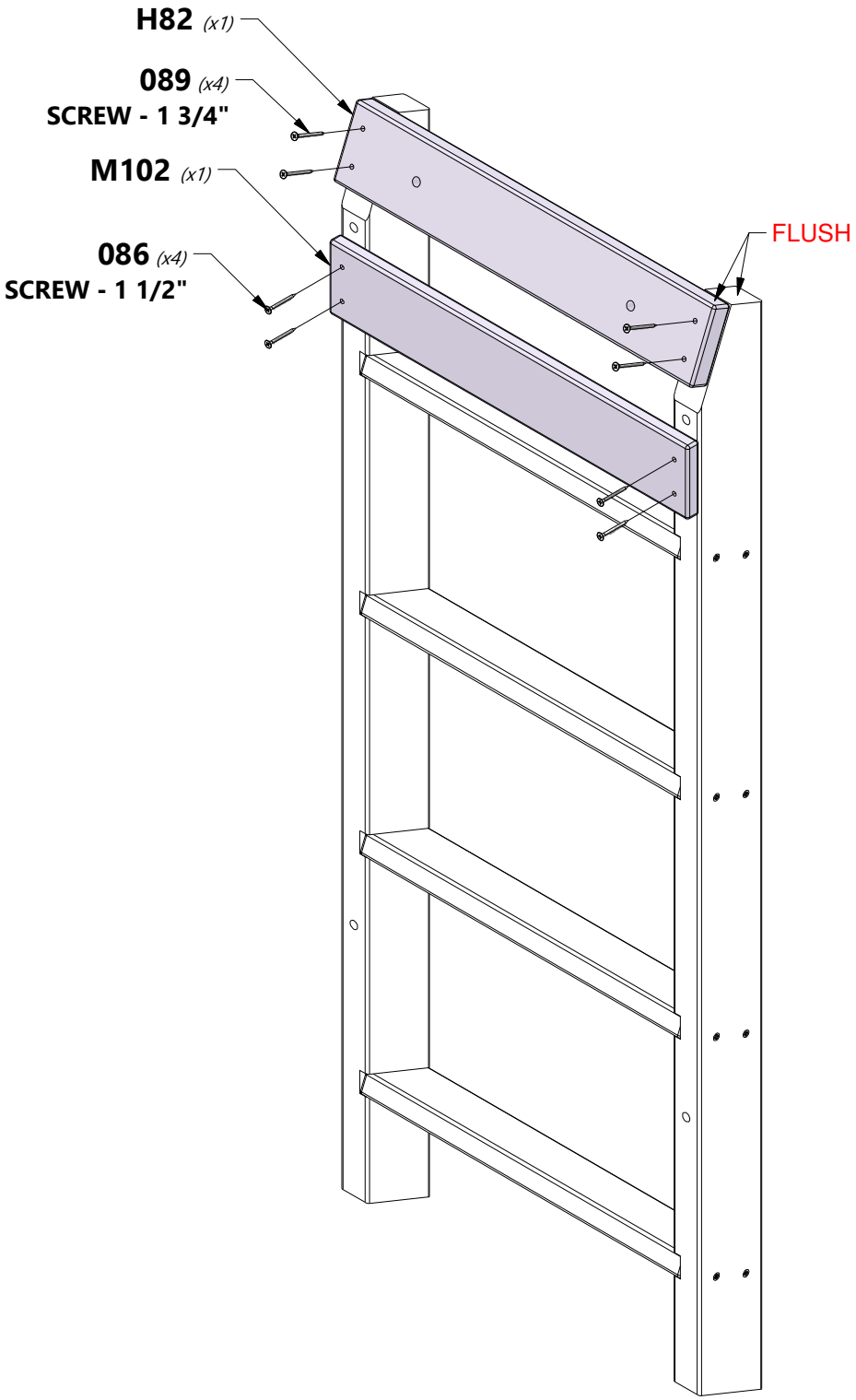

STEP 4 - LADDER ASSEMBLY

QTY	PART NUMBER	DESCRIPTION
4	H100018	BOLT WH 5/16x3 1/2
4	H100074	T-NUT 5/16

A100134 *(x2)* | **HAND GRIP GREEN 816 C/C**

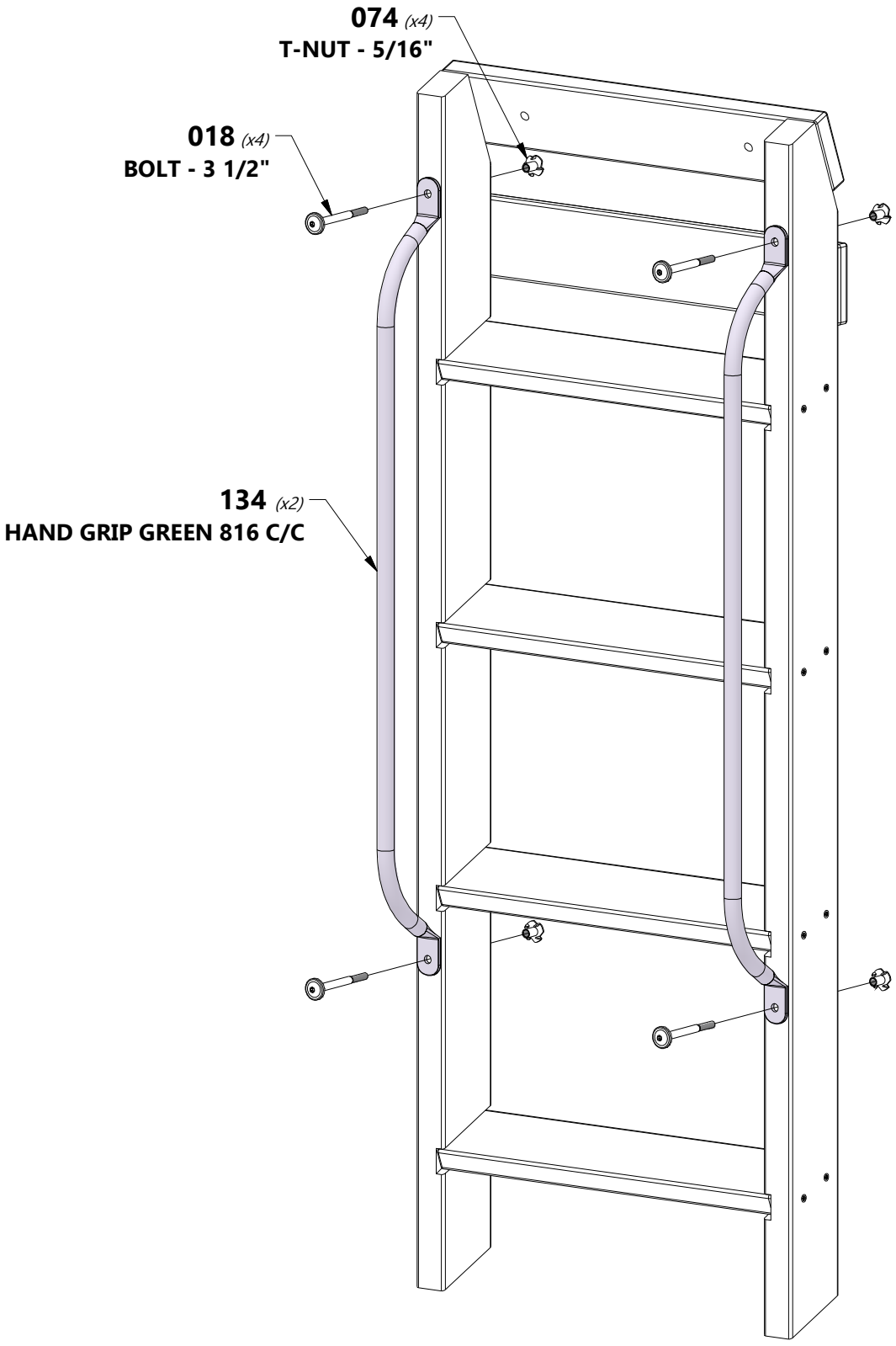

STEP 1 - BAY WINDOW ASSEMBLY

QTY	PART NUMBER	DESCRIPTION
8	H100088	SCREW PFH 8x1-1/8"

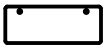

N5 | **BAY WINDOW BOARD - W4L14606**
(x2) | *5/8"x2 3/8"x6 1/4" (16x60x158)*

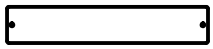

N4 | **BAY WINDOW BOARD - W4L14605**
(x2) | *5/8"x2 3/8"x13 1/8" (16x60x332)*

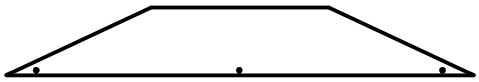

L6 | **BAY WINDOW HEADER - W4L14568**
(x2) | *5/8"x4 3/8"x30 1/2" (16x112x774)*

TIP:
ASSEMBLE USING PILOT HOLES

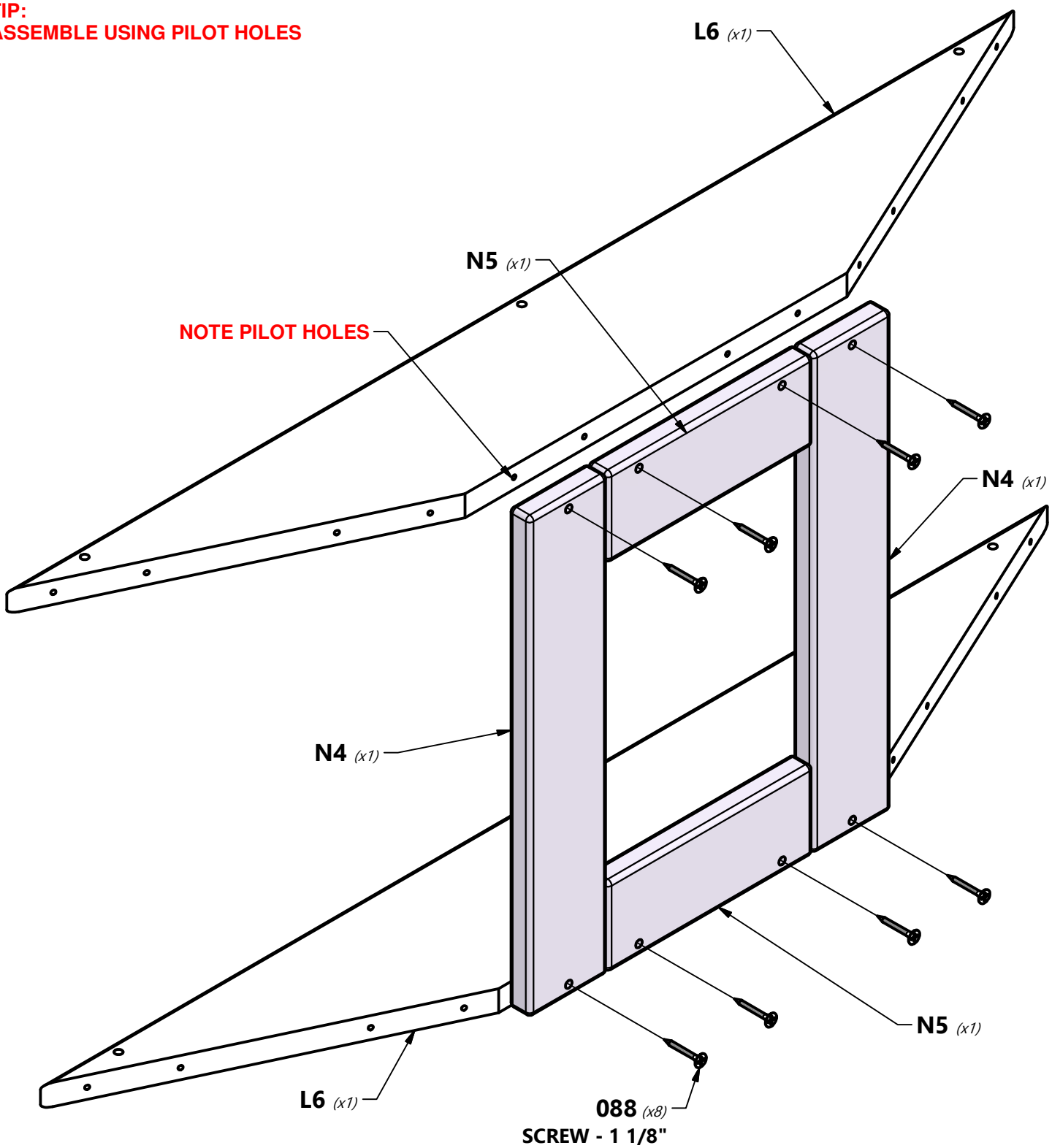

STEP 2 - BAY WINDOW ASSEMBLY

QTY	PART NUMBER	DESCRIPTION
2	H100085	SCREW PFH 8x1"
6	H100088	SCREW PFH 8x1-1/8"

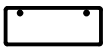

N5 *(x2)* | **BAY WINDOW BOARD - W4L14606**
5/8"x2 3/8"x6 1/4" (16x60x158)

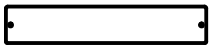

N4 *(x2)* | **BAY WINDOW BOARD - W4L14605**
5/8"x2 3/8"x13 1/8" (16x60x332)

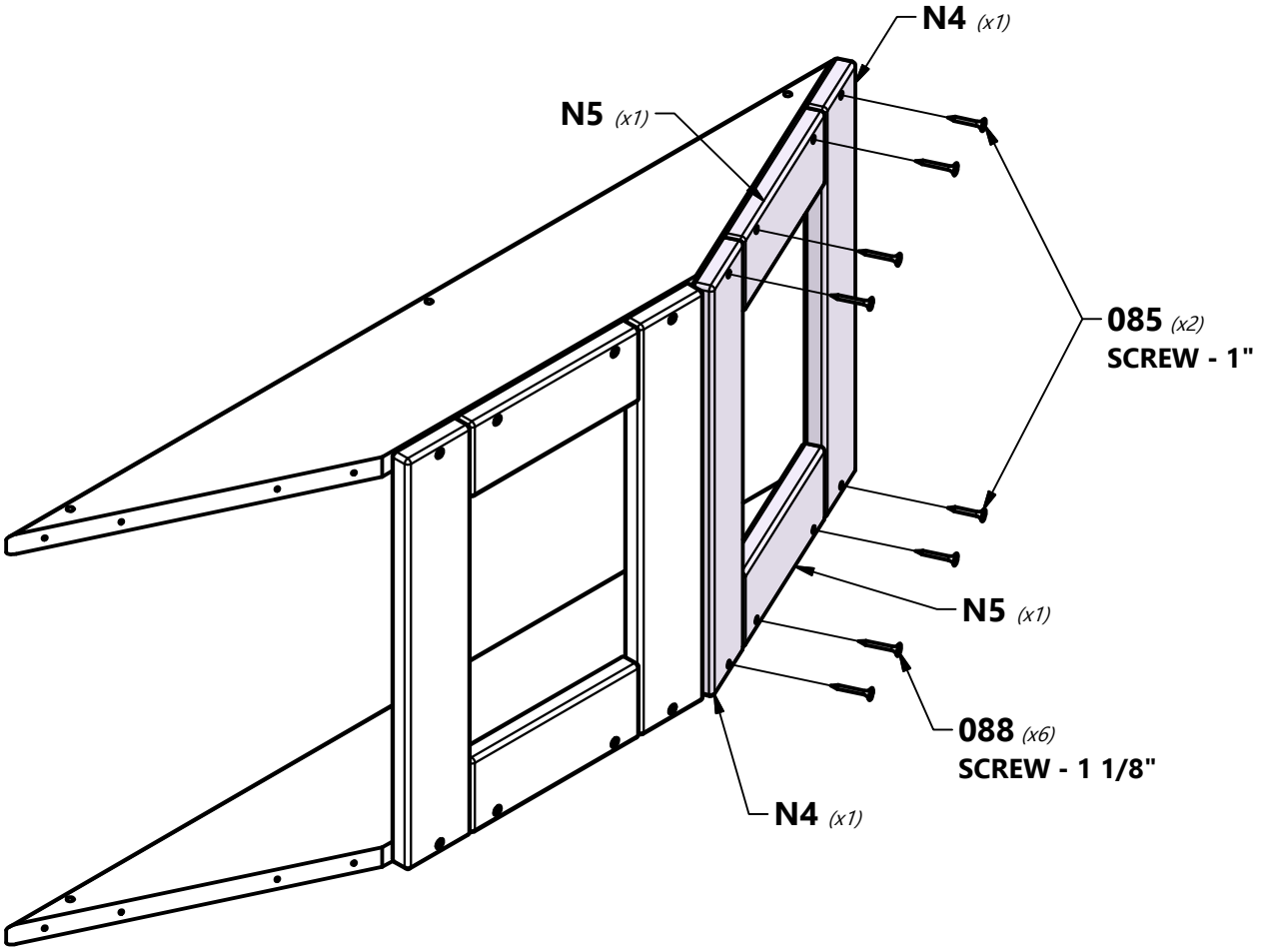

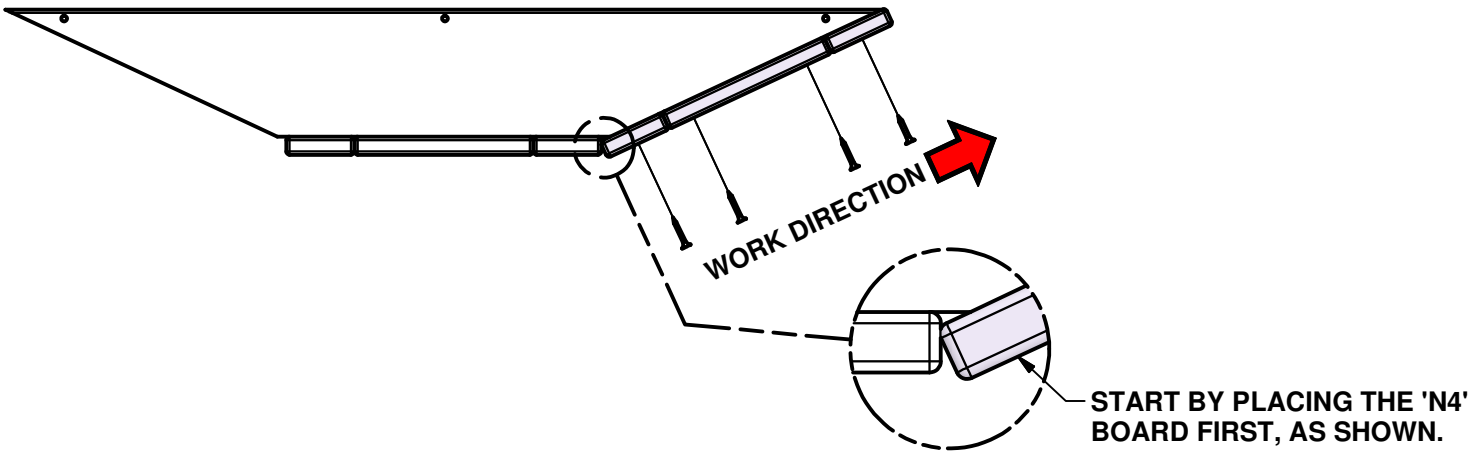

STEP 3 - BAY WINDOW ASSEMBLY

QTY	PART NUMBER	DESCRIPTION
2	H100085	SCREW PFH 8x1"
6	H100088	SCREW PFH 8x1-1/8"

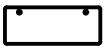

N5 | **BAY WINDOW BOARD - W4L14606**
(x2) | *5/8"x2 3/8"x6 1/4" (16x60x158)*

N4 | **BAY WINDOW BOARD - W4L14605**
(x2) | *5/8"x2 3/8"x13 1/8" (16x60x332)*

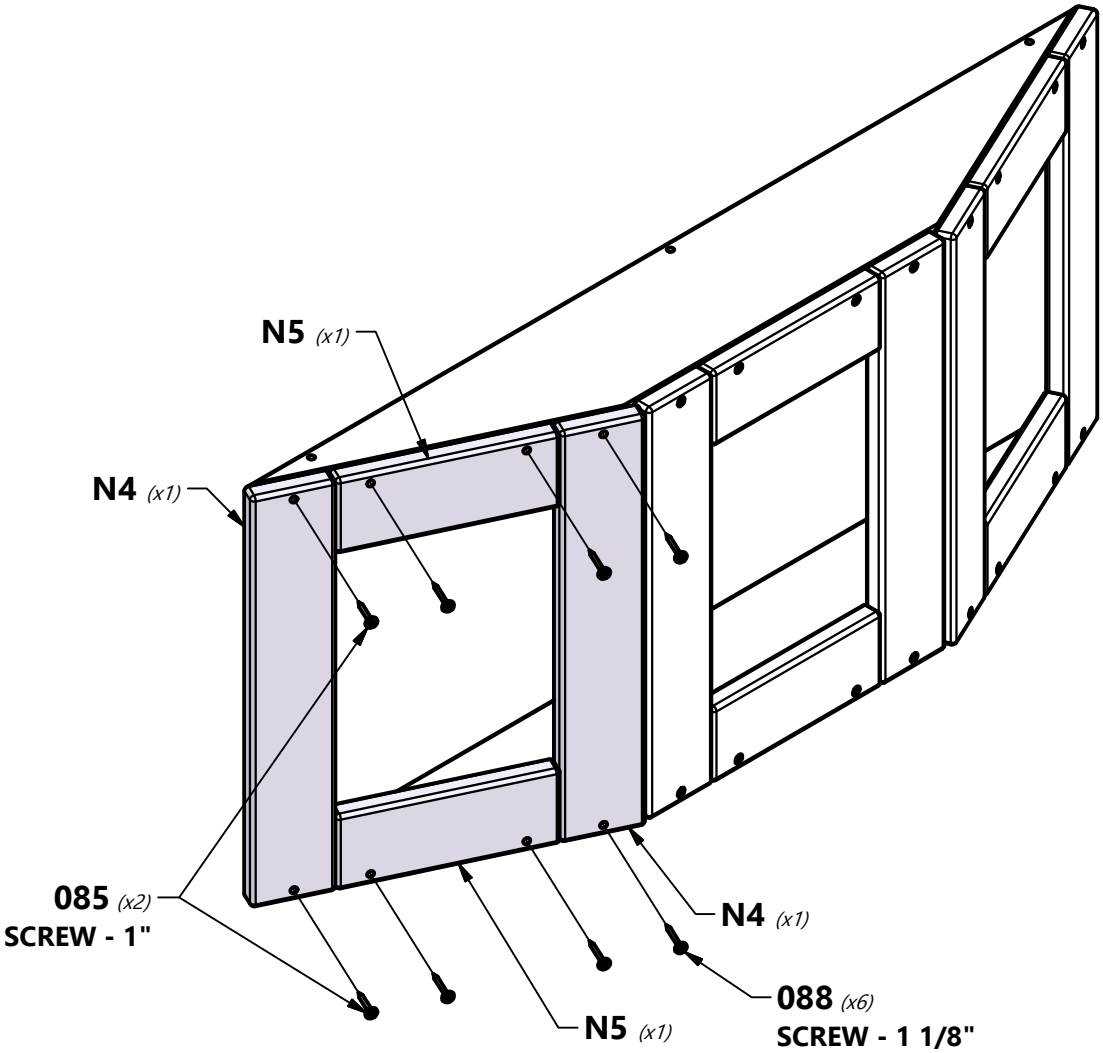

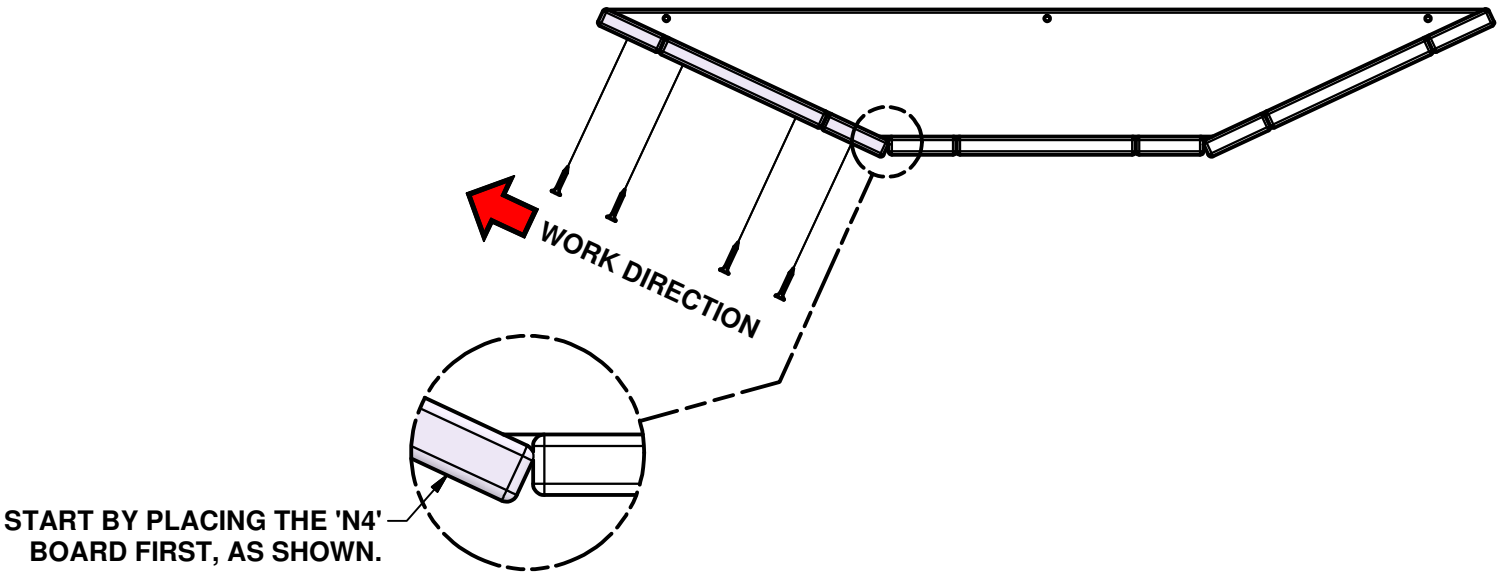

STEP 4 - BAY WINDOW ASSEMBLY

QTY	PART NUMBER	DESCRIPTION
12	H100070	SCREW PWH 8x3/4

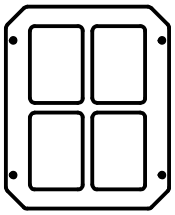

A100014 *(x3)* | **PLASTIC WINDOW WHITE**

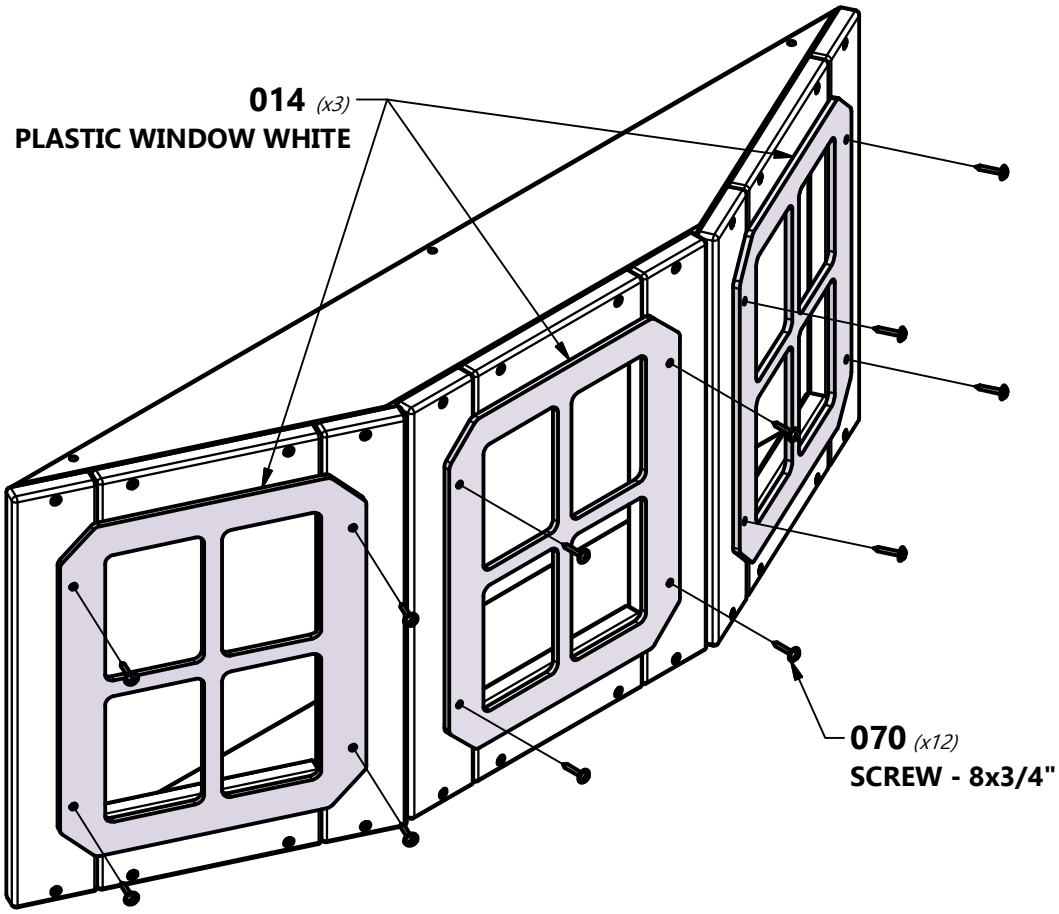

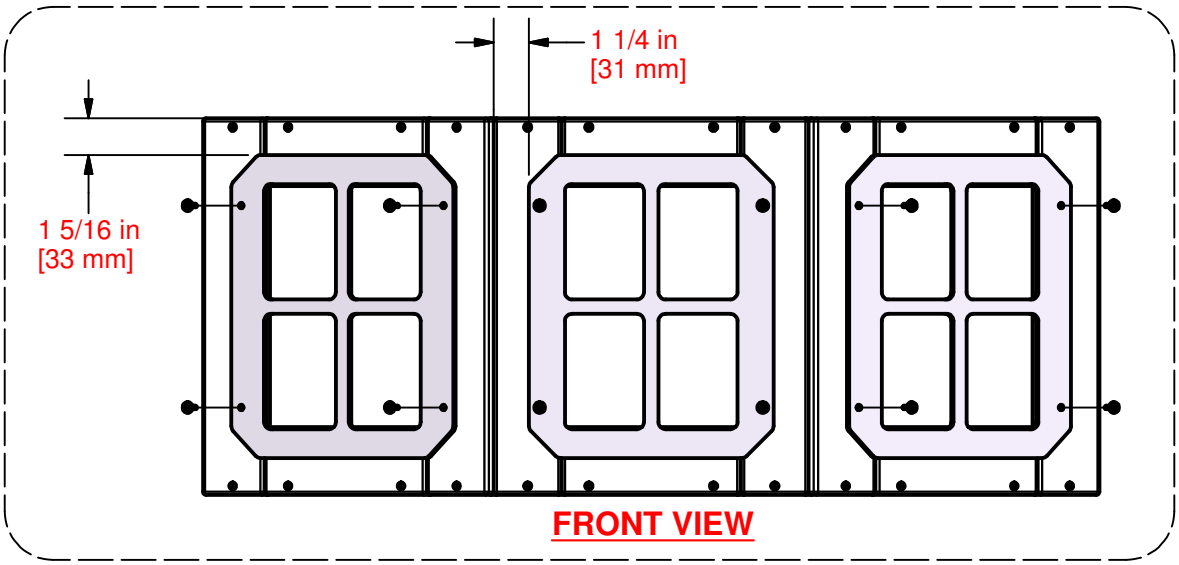

STEP 1 - BENCH ASSEMBLY

QTY	PART NUMBER	DESCRIPTION
2	H100199	WASHER LOCK EXT 12x19 BLK
2	H100469	NUT BARREL WH 5/16x5/8 BLK
2	H100663	BOLT WH 5/16x3/4 BLK

H7 *(x2)* | **BENCH GROUND BOARD - W4L14546**
1"x3 3/8"x18 1/8" (24x86x460)

A100061 *(x2)* | **L BRACKET GREEN 32x51**

NOTE:
ASSEMBLE A LEFT AND A RIGHT BENCH GROUND BOARD SUBASSEMBLY, SHOWN BELOW.

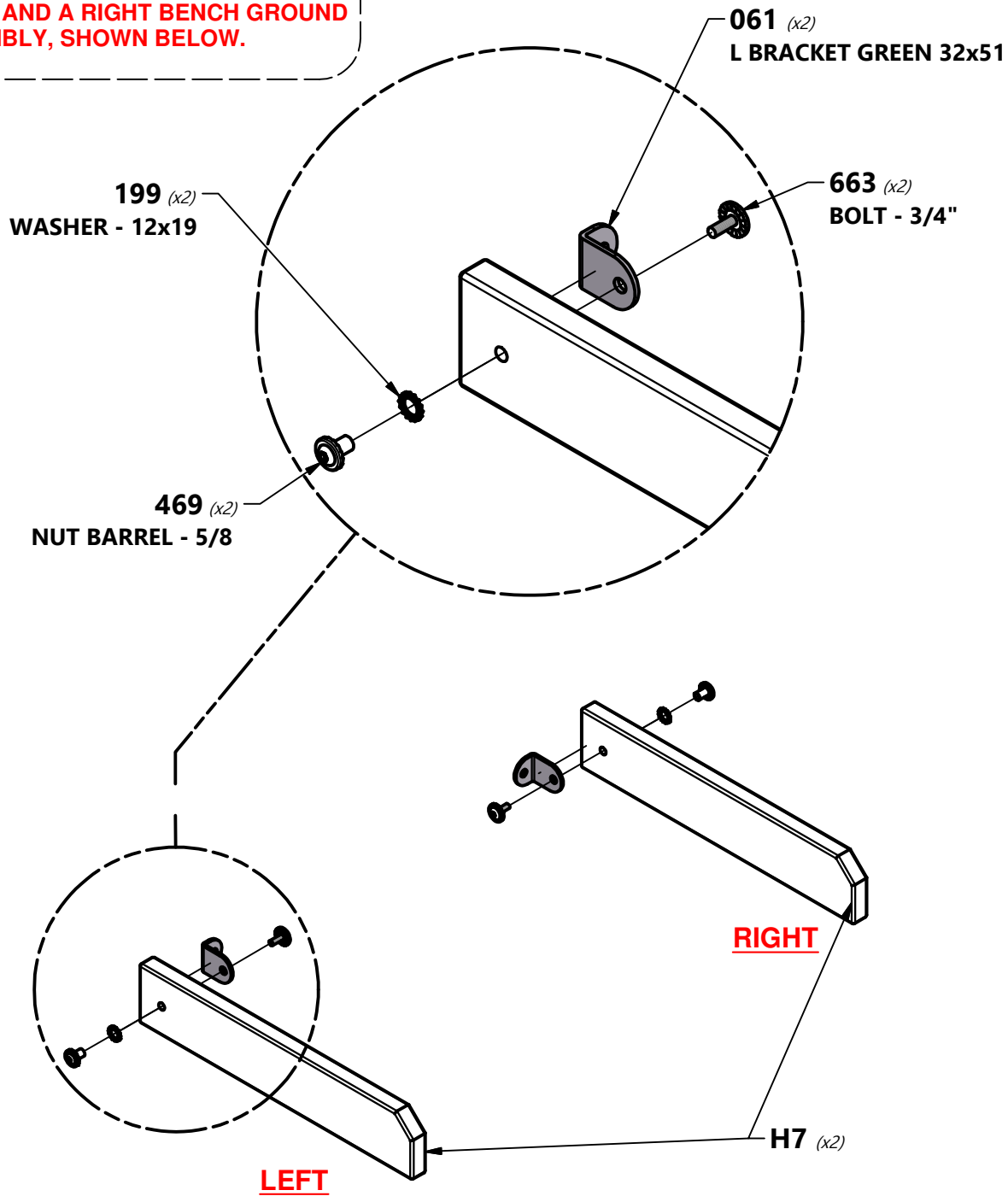

STEP 2 - BENCH ASSEMBLY

QTY	PART NUMBER	DESCRIPTION
8	H100089	SCREW PFH 8x1-3/4"

H8 (x2) | **BENCH UPRIGHT - W4L14547**
1"x3 3/8"x11 3/4" (24x86x300)

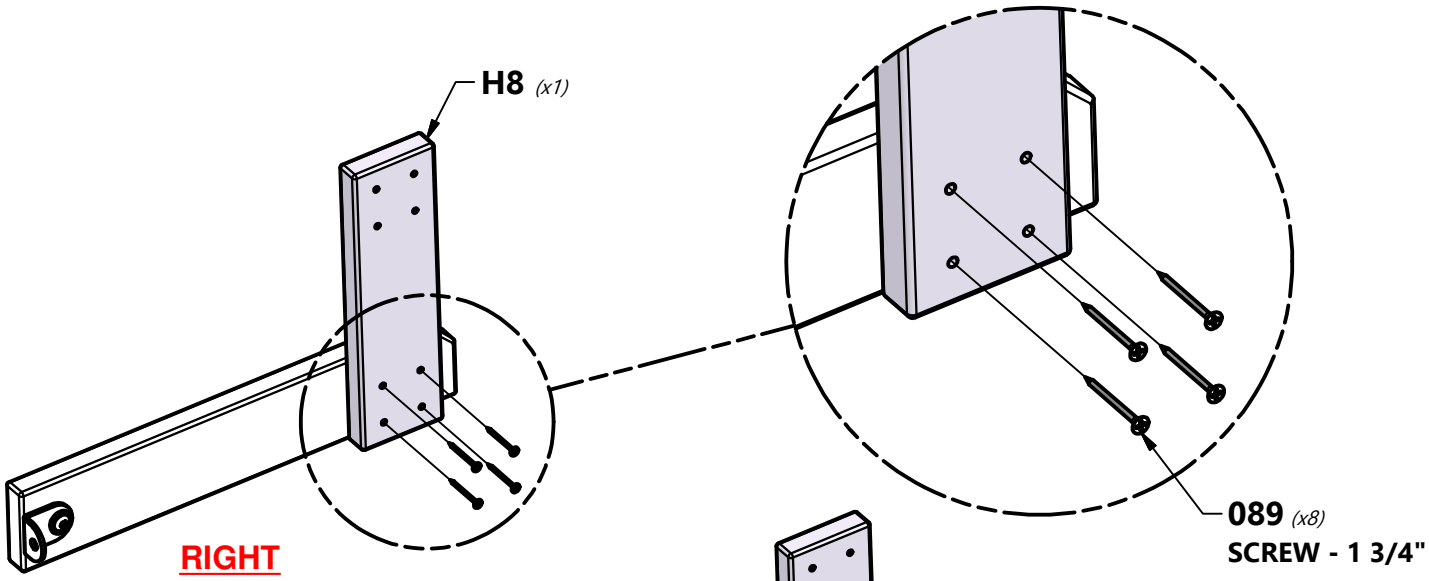

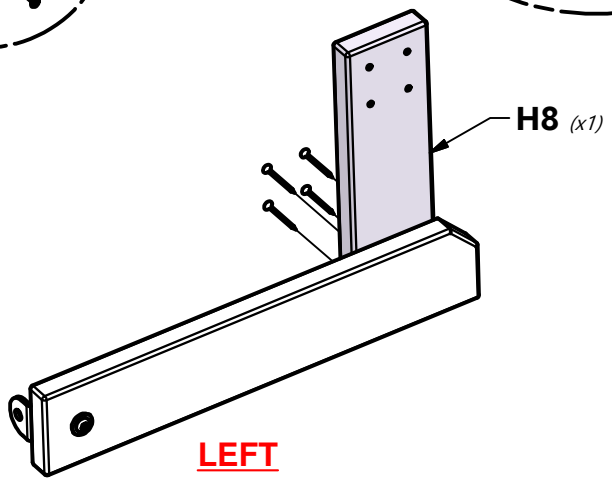

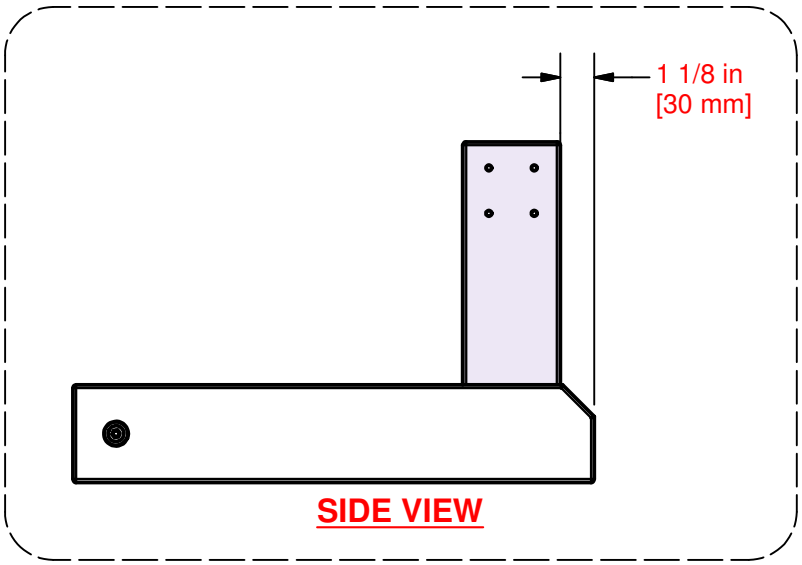

STEP 3 - BENCH ASSEMBLY

QTY	PART NUMBER	DESCRIPTION
8	H100089	SCREW PFH 8x1-3/4"

H9 *(x2)* | **BENCH SEAT SUPPORT - W4L14548**
1"x3 3/8"x6 1/2" (24x86x166)

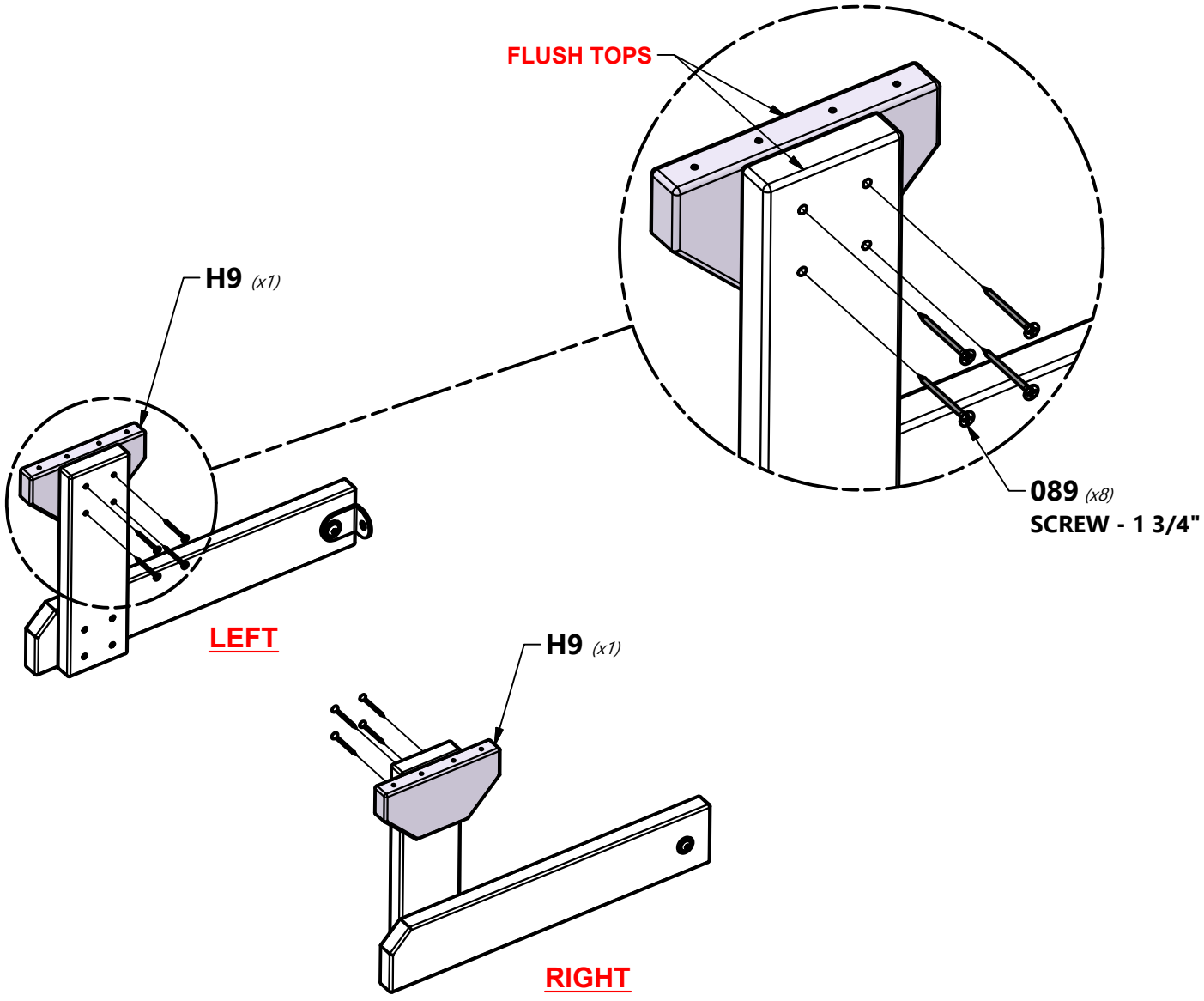

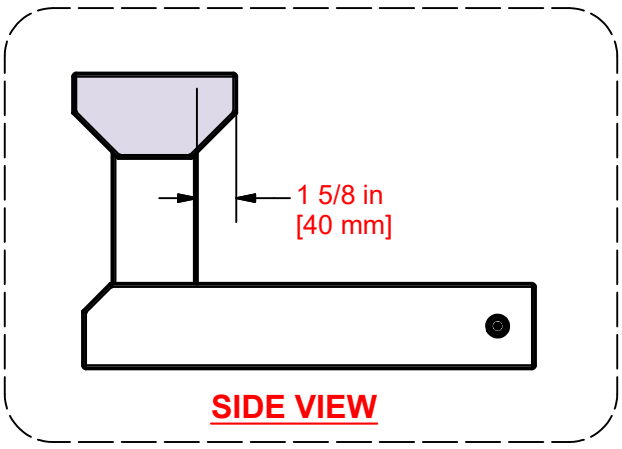

STEP 4 - BENCH ASSEMBLY

QTY	PART NUMBER	DESCRIPTION
4	H100088	SCREW PFH 8x1-1/8"
8	H100089	SCREW PFH 8x1-3/4"

H11 *(x2)* | **BENCH SEAT - W4L14555**
1"x3 3/8"x35 3/8" (24x86x900)

N7 *(x1)* | **BENCH CLEAT - W4L14607**
5/8"x2 3/8"x5 1/8" (16x60x130)

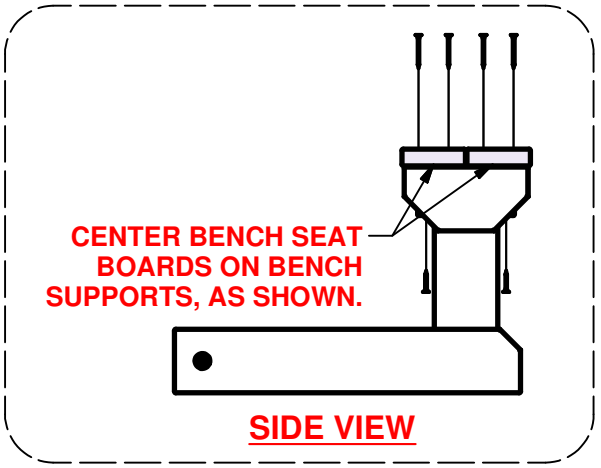

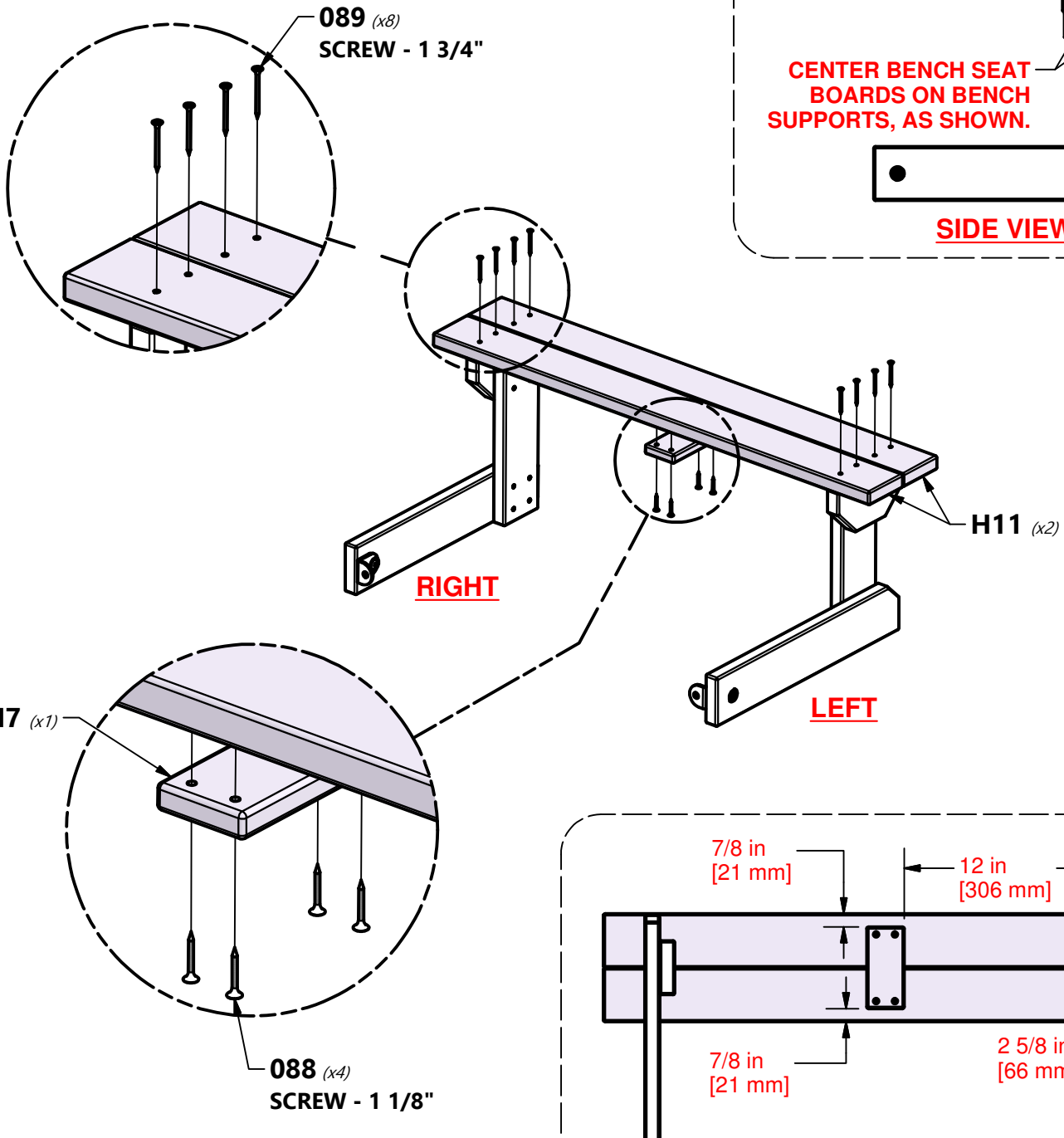

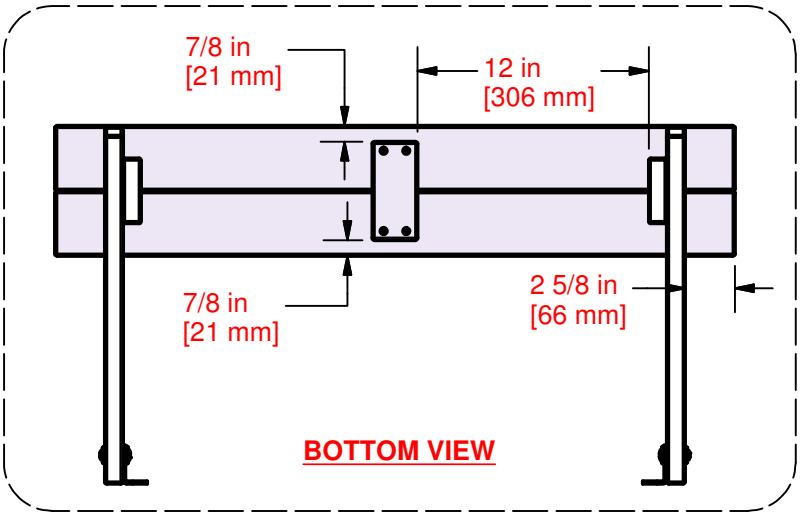

STEP 1 - DOOR ASSEMBLY

QTY	PART NUMBER	DESCRIPTION
36	H100088	SCREW PFH 8x1-1/8"

L7 | **DOOR BOARD - W4L14569**
(x1) | *5/8"x4 3/8"x35" (16x110x890)*

M24 | **DOOR BOARD - W4L14594**
(x2) | *5/8"x3 3/8"x21 1/4" (16x86x540)*

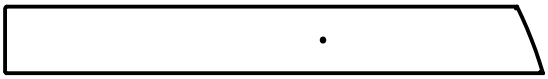

L8 | **DOOR BOARD - W4L14570**
(x1) | *5/8"x4 3/8"x35" (16x110x890)*

M23 | **DOOR BOARD - W4L14593**
(x2) | *5/8"x3 3/8"x35 3/4" (16x86x908)*

O1 | **DOOR CLEAT - W4L14609**
(x3) | *5/8"x1 3/8"x21" (16x34x534)*

M25 | **DOOR BOARD - W4L14595**
(x2) | *5/8"x3 3/8"x6 1/4" (16x86x160)*

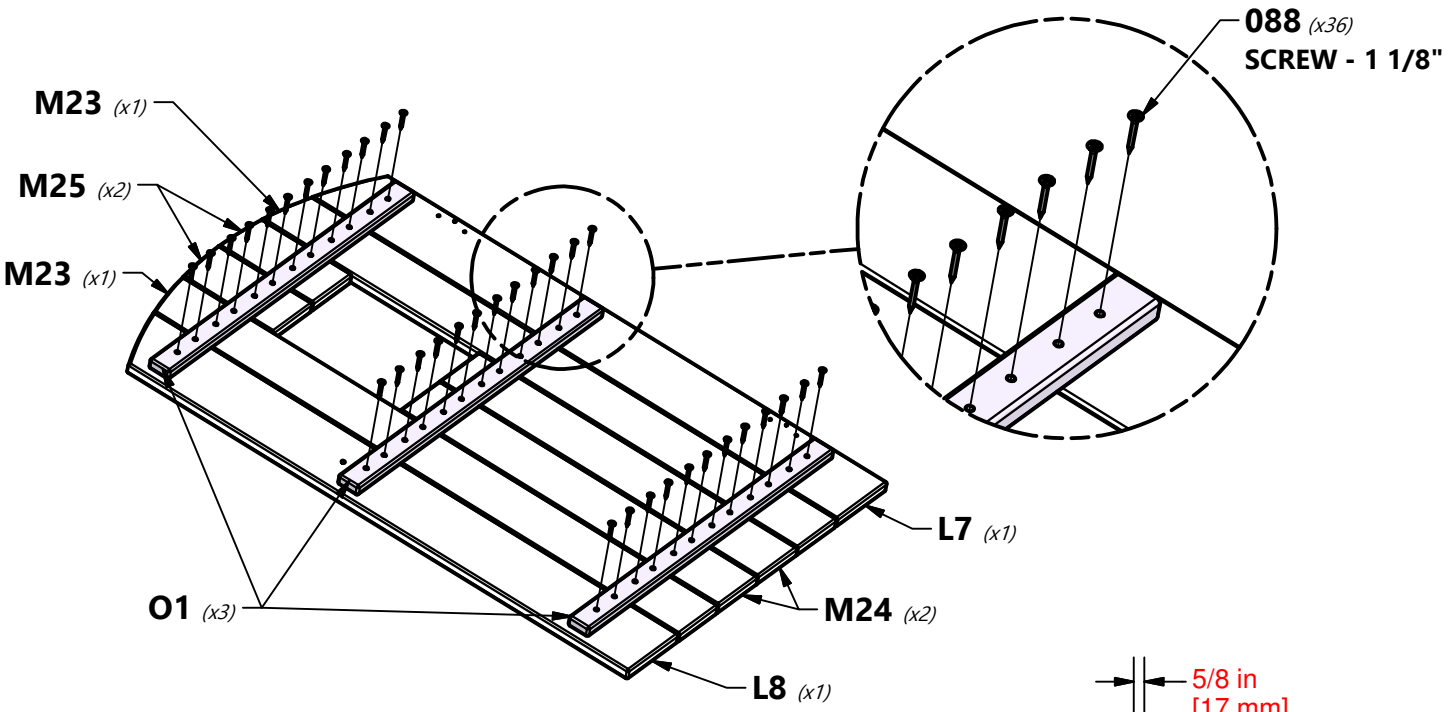

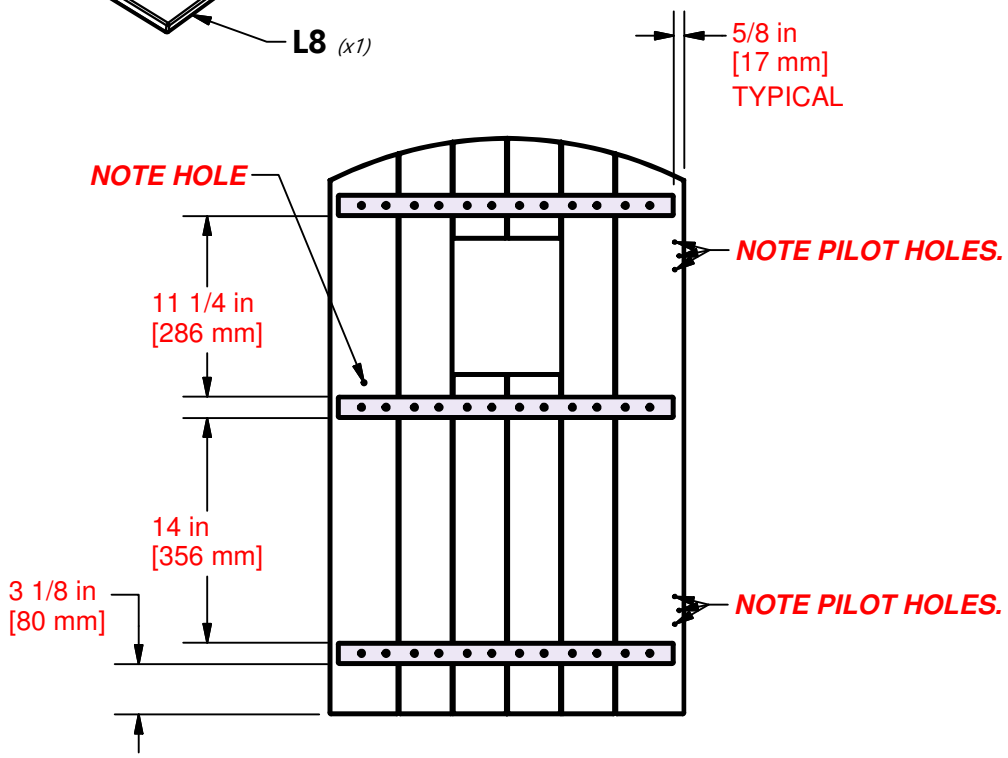

STEP 2 - DOOR ASSEMBLY

QTY	PART NUMBER	DESCRIPTION
4	H100070	SCREW PWH 8x3/4

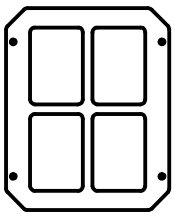

A100014 *(x1)* | **PLASTIC WINDOW WHITE**

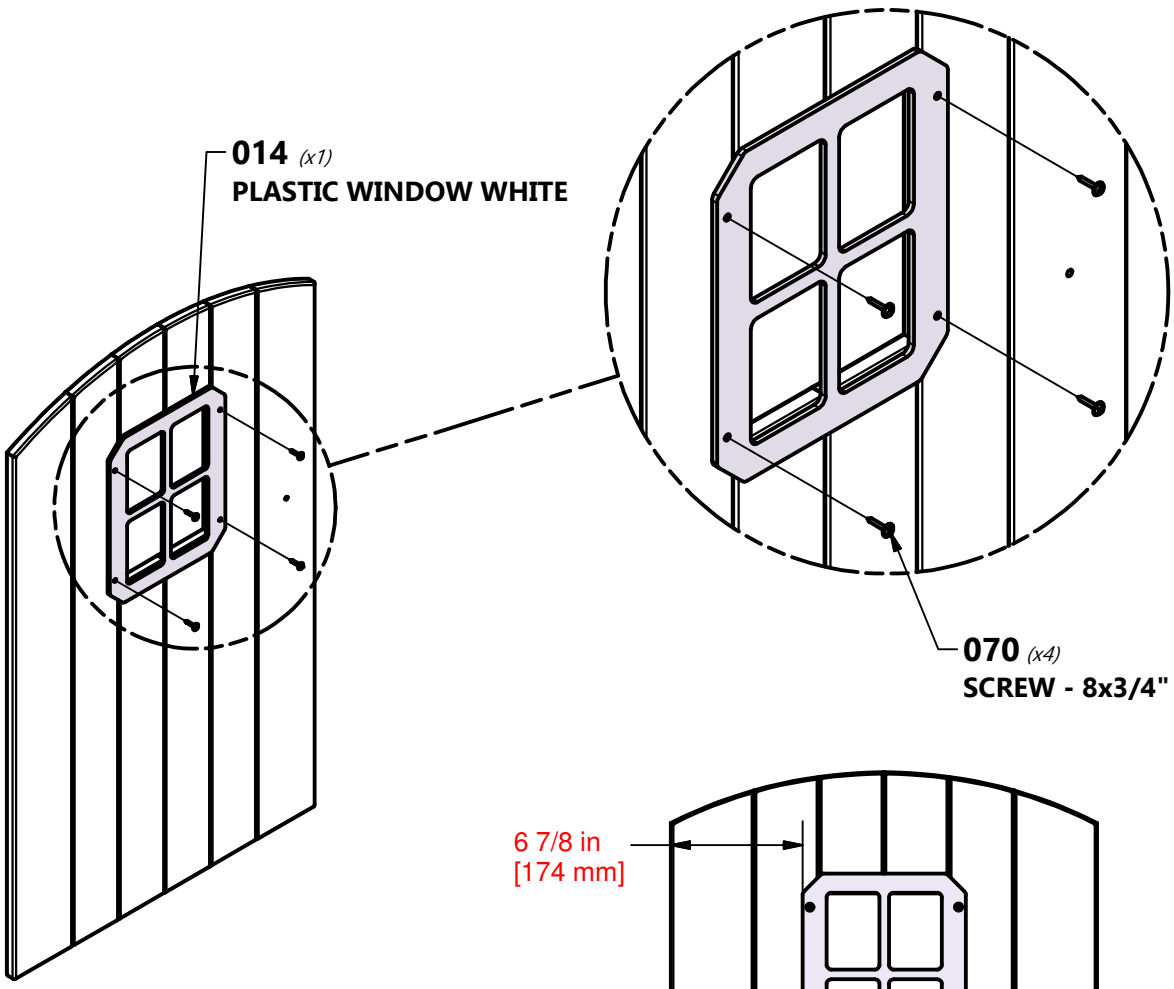

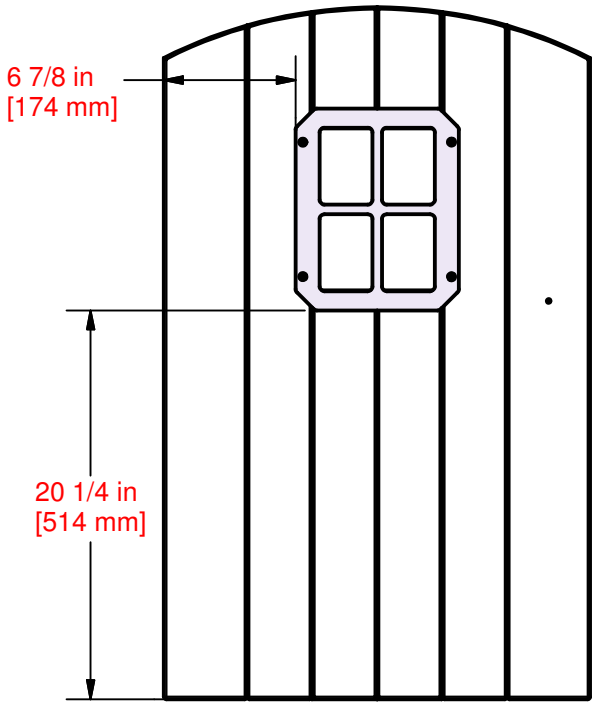

STEP 3 - DOOR ASSEMBLY

QTY	PART NUMBER	DESCRIPTION
1	H100088	SCREW PFH 8x1-1/8"
6	H100624	SCREW PFH 6x5/8" BLK

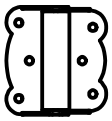

A4M00624 *(x2)* | **HINGE (DOOR, SPRING LOADED)**

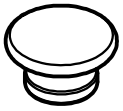

A6P00122 *(x1)* | **KNOB - LT BROWN**

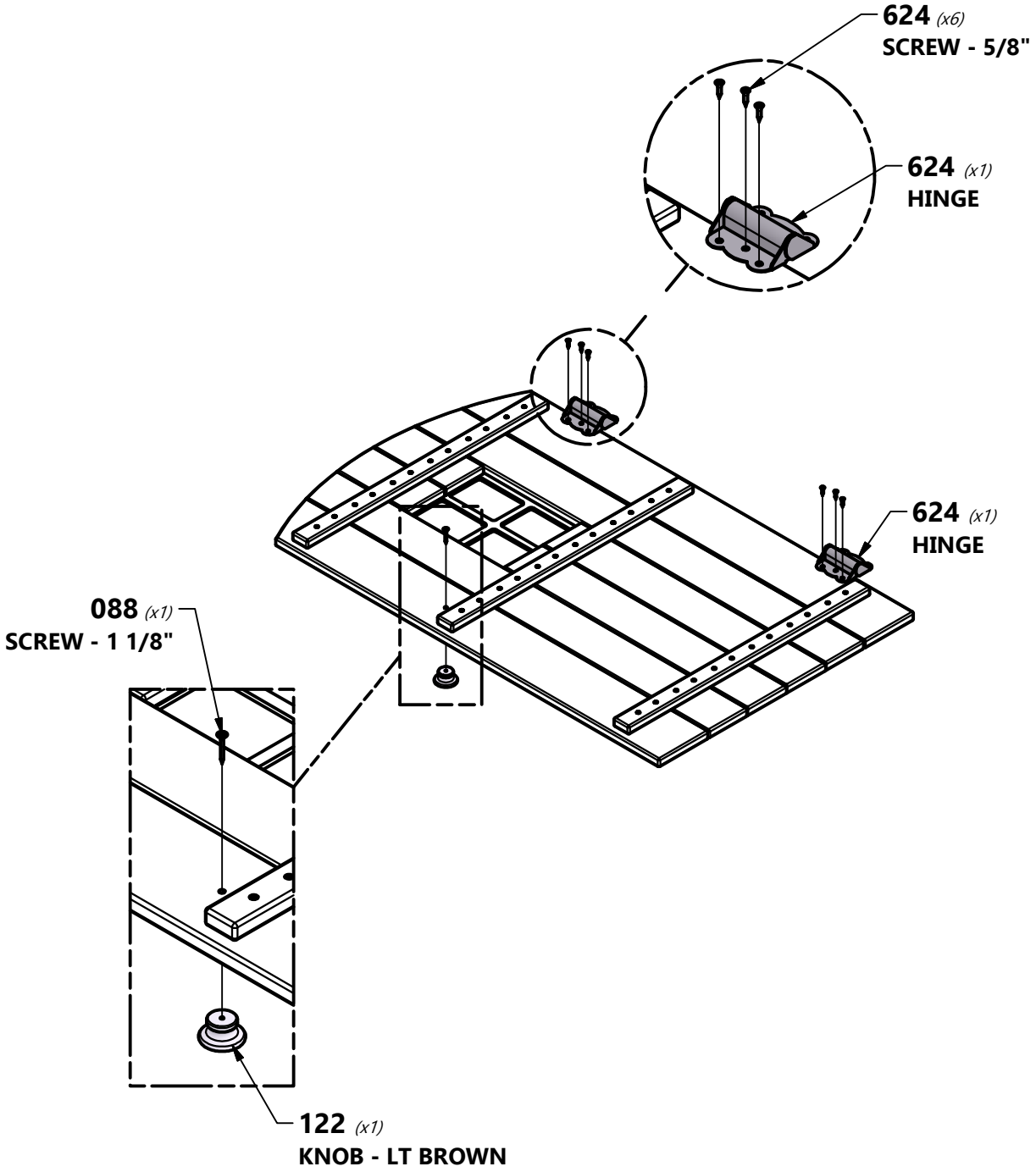

STEP 1 - MONKEY BAR ASSEMBLY

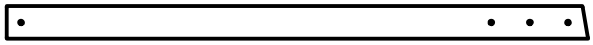

E71 *(x1)* | **MONKEY BAR RAIL - W4L06929**
1 3/8"x3 3/8"x60 5/8" (36x86x1539)

A100053 *(x1)* | **L BRACKET 54x67 - GRN**

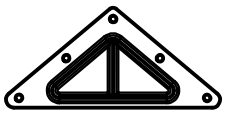

A100294 *(x1)* | **TRIANGLE PLATE 100° 5 HOLE**

QTY	PART NUMBER	DESCRIPTION
3	H100379	T-NUT 5/16 BLK
3	H100407	BOLT WH 5/16x1 1/2 BLK
1	H100457	BOLT WH 5/16x2 BLK
1	H100478	WASHER FLAT 8x27 BLK
1	H100479	NUT LOCK 5/16 BLK

TIP:
INSTALL T-NUTS IN WOOD FIRST

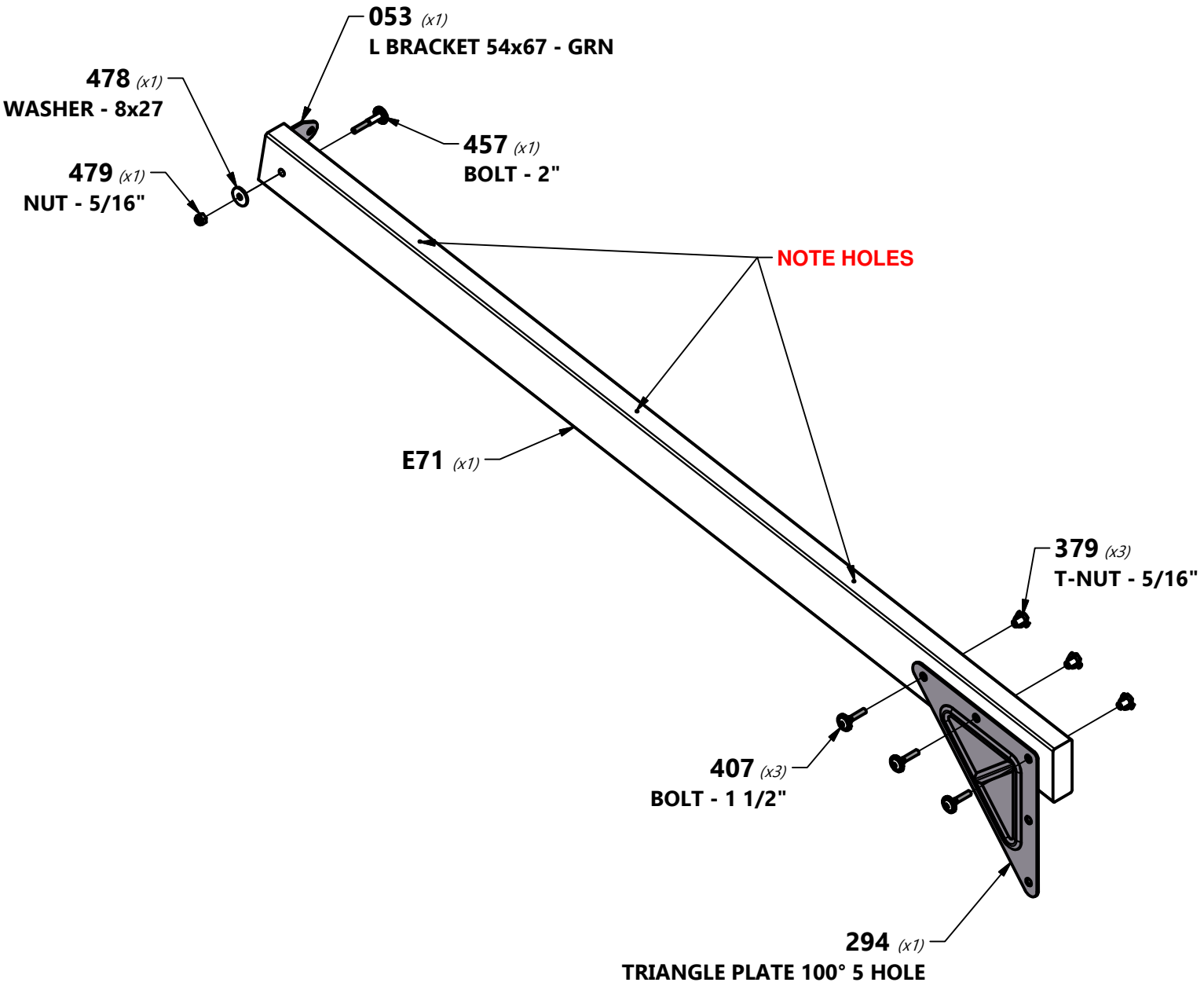

STEP 2 - MONKEY BAR ASSEMBLY

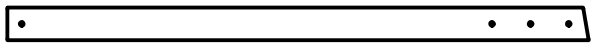

E71 | **MONKEY BAR RAIL - W4L06929**
(x1) | *1 3/8"x3 3/8"x60 5/8" (36x86x1539)*

A100053 *(x1)* | **L BRACKET 54x67 - GRN**

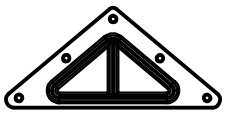

A100294 *(x1)* | **TRIANGLE PLATE 100° 5 HOLE**

QTY	PART NUMBER	DESCRIPTION
3	H100379	T-NUT 5/16 BLK
3	H100407	BOLT WH 5/16x1 1/2 BLK
1	H100457	BOLT WH 5/16x2 BLK
1	H100478	WASHER FLAT 8x27 BLK
1	H100479	NUT LOCK 5/16 BLK

TIP:
INSTALL T-NUTS IN WOOD FIRST

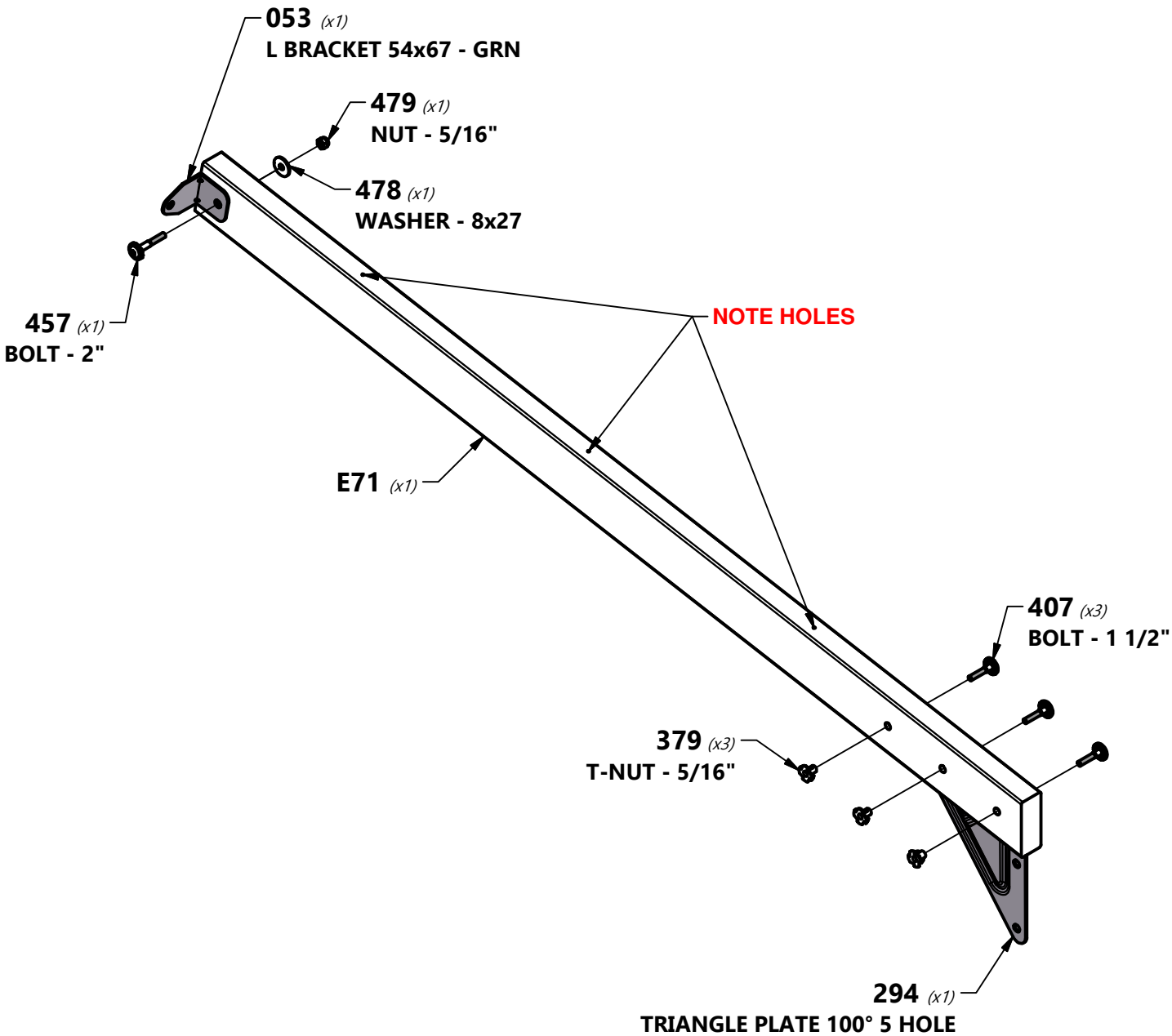

STEP 3 - MONKEY BAR ASSEMBLY

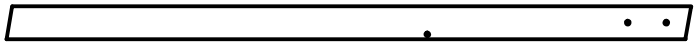

E6 | **MONKEY BAR UPRIGHT - W4L14536**
(x1) | *1 3/8"x3 3/8"x71 3/8" (36x86x1812)*

A100028 *(x1)* | **HAND GRIP GREEN PLASTIC**

QTY	PART NUMBER	DESCRIPTION
2	H100379	T-NUT 5/16 BLK
2	H100407	BOLT WH 5/16x1 1/2 BLK
2	H100403	LAG SCREW WH 1/4x1-1/2 BLK
2	H100405	WASHER LOCK EXT 6x15 BLK

TIP:
INSTALL T-NUTS IN WOOD FIRST

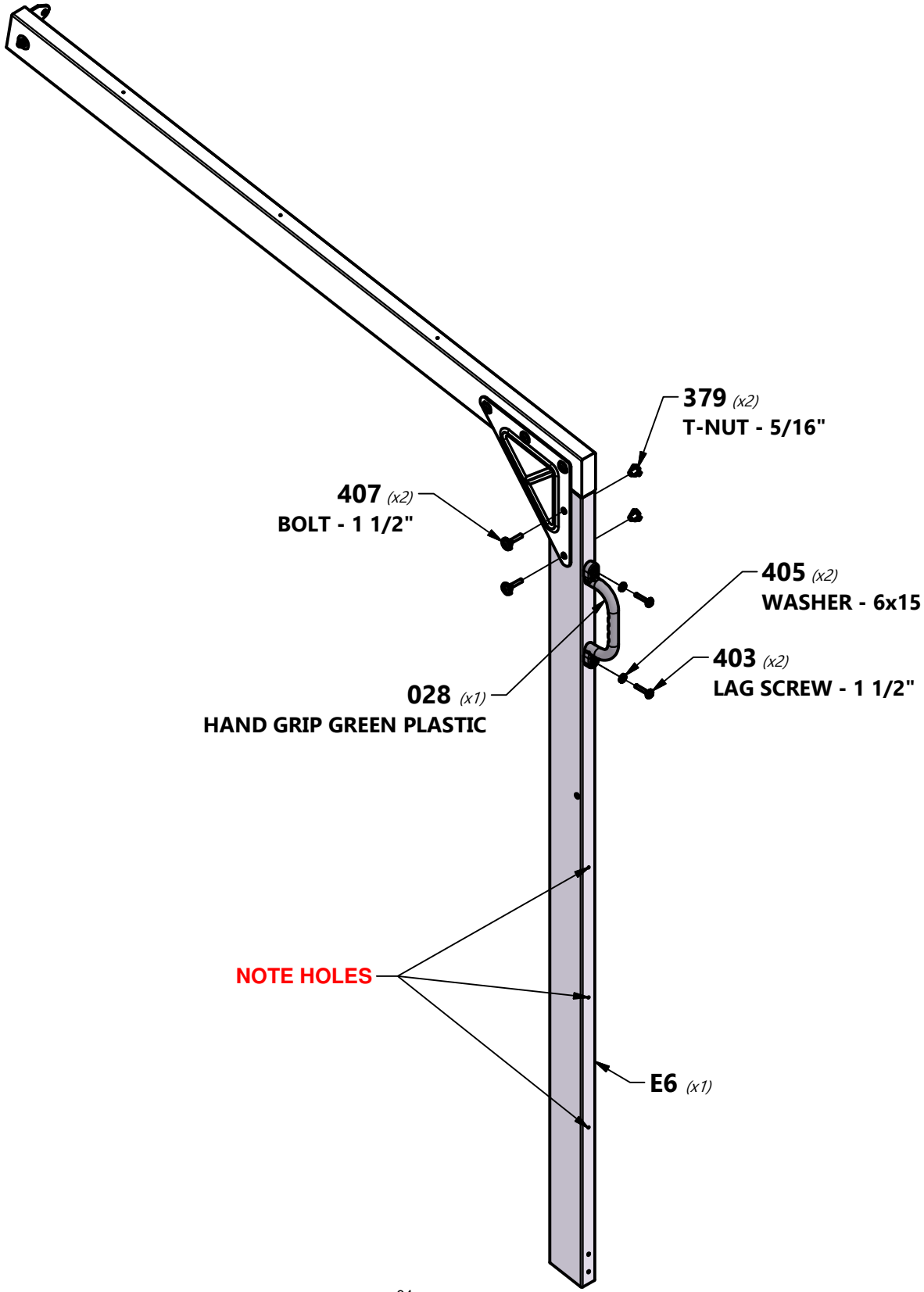

STEP 4 - MONKEY BAR ASSEMBLY

E6 | **MONKEY BAR UPRIGHT - W4L14536**
(x1) | *1 3/8"x3 3/8"x71 3/8" (36x86x1812)*

A100028 *(x1)* | **HAND GRIP GREEN PLASTIC**

QTY	PART NUMBER	DESCRIPTION
2	H100379	T-NUT 5/16 BLK
2	H100407	BOLT WH 5/16x1 1/2 BLK
2	H100403	LAG SCREW WH 1/4x1-1/2 BLK
2	H100405	WASHER LOCK EXT 6x15 BLK

TIP:
INSTALL T-NUTS IN WOOD FIRST

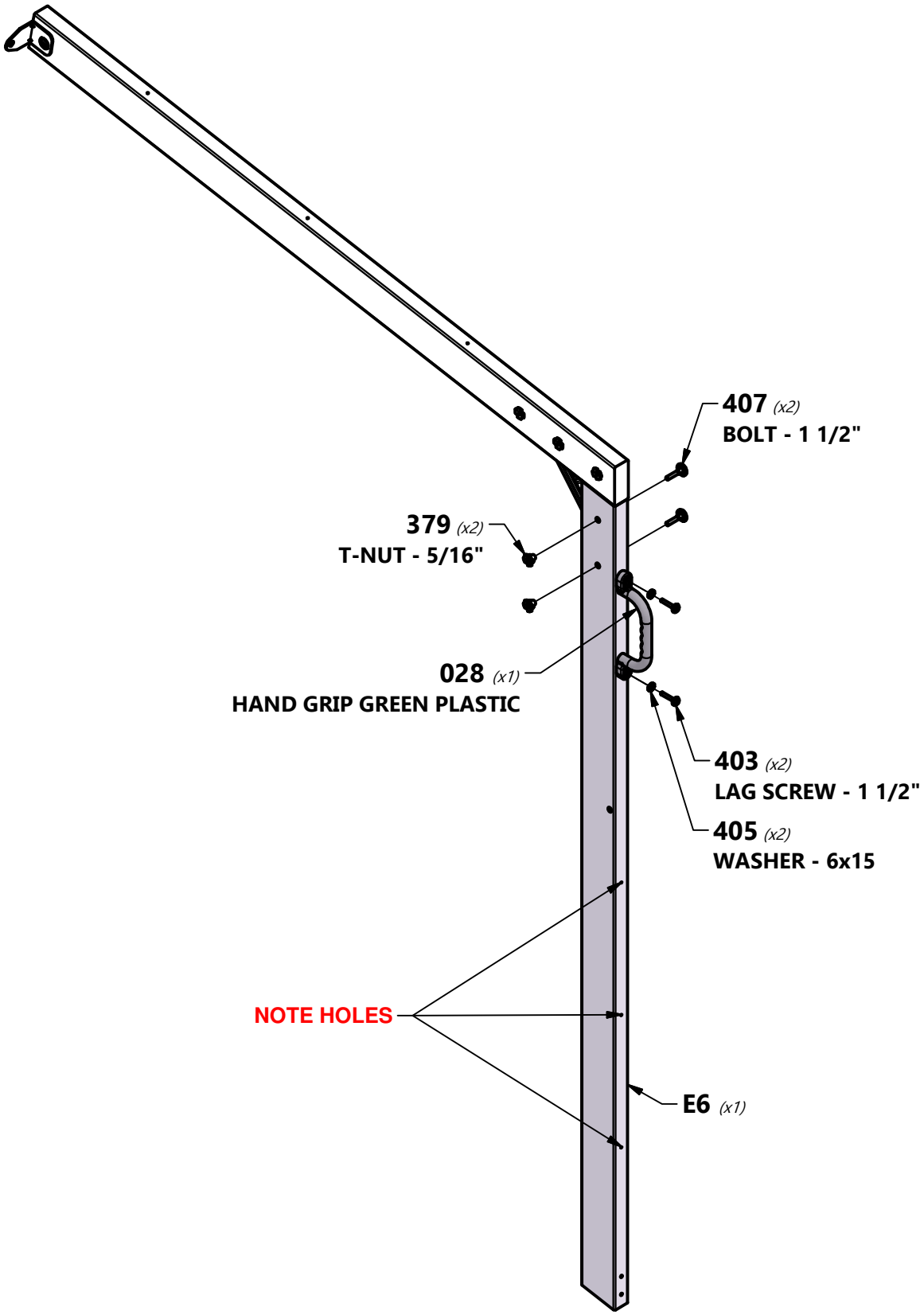

STEP 5 - MONKEY BAR ASSEMBLY

QTY	PART NUMBER	DESCRIPTION
12	H100403	LAG SCREW WH 1/4x1-1/2 BLK

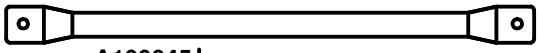

A100045 *(x6)* | **METAL RUNG 559 GREEN**

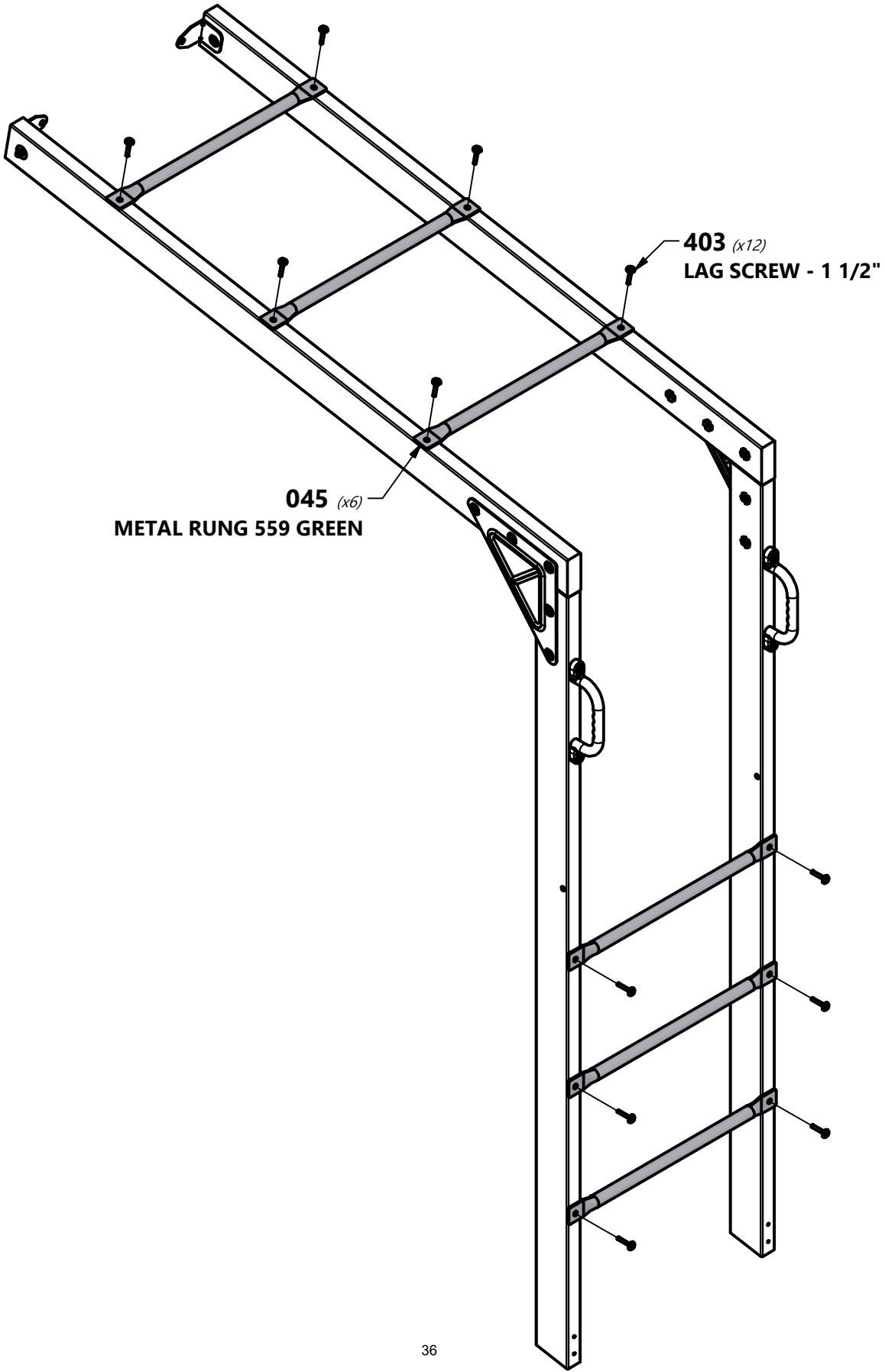

STEP 6 - MONKEY BAR ASSEMBLY

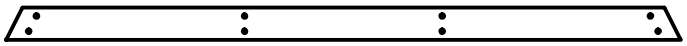

H3 | **MONKEY BAR GROUND BOARD - W4L14545**
(x1) | *1"x3 3/8"x70 3/8" (24x86x1786)*

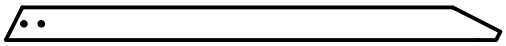

H2 | **MONKEY BAR BRACE - W4L14544**
(x2) | *1"x3 3/8"x51 1/2" (24x86x1308 mm)*

QTY	PART NUMBER	DESCRIPTION
8	H100198	WASHER LOCK EXT 8x19 BLK
4	H100378	BOLT WH 5/16x1 3/4 BLK
6	H100379	T-NUT 5/16 BLK
4	H100458	LAG SCREW WH 5/16x2 BLK
2	H100472	BOLT HEX 5/16x2-3/4 BLK
2	H100473	WASHER LOCK INT 8x15 BLK
2	H100474	WASHER FLAT 9x18 BLK

TIP:
INSTALL T-NUTS IN WOOD FIRST

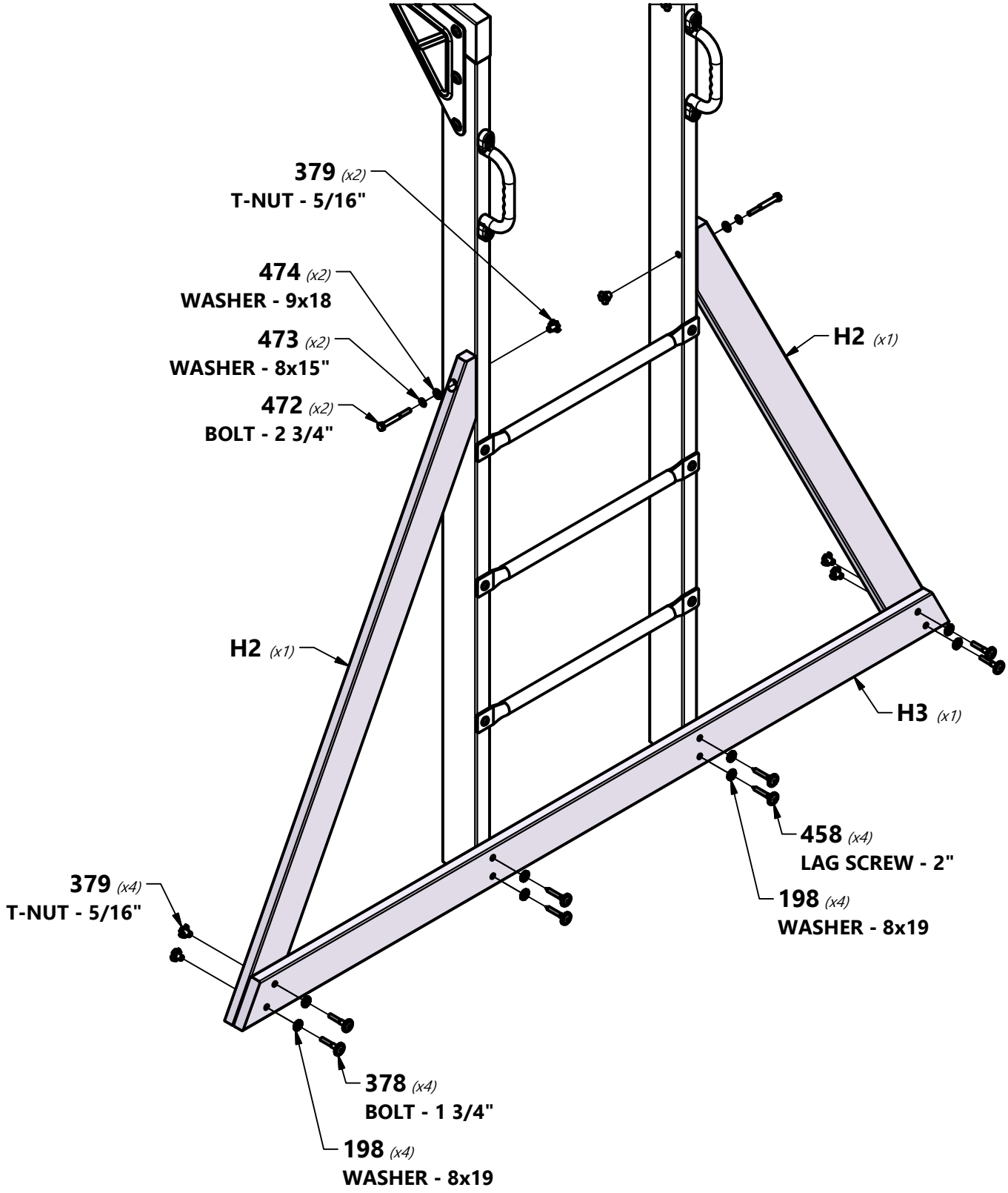

STEP 1 - SWING BEAM ASSEMBLY

SB74 *(x1)* | **SWING BEAM EXTENDED - W4L16477**
2"x5 1/4"x89 1/2" (50x134x2274)

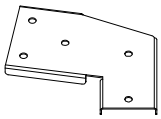

A100325 *(x1)* | **SWING BEAM EXTENSION BRACKET-LEFT**

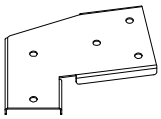

A100326 *(x1)* | **SWING BEAM EXTENSION BRACKET-RIGHT**

QTY	PART NUMBER	DESCRIPTION
3	H100192	NUT BARREL WH 5/16x7/8 BLK
3	H100378	BOLT WH 5/16x1 3/4 BLK
2	H100472	BOLT HEX 5/16x2-3/4 BLK
4	H100478	WASHER FLAT 8x27 BLK
2	H100479	NUT LOCK 5/16 BLK

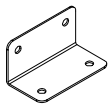

A100140 *(x2)* | **L BRACKET 66x66x127**

TIP:
LEAVE 378 BOLTS HAND TIGHT AT THIS TIME

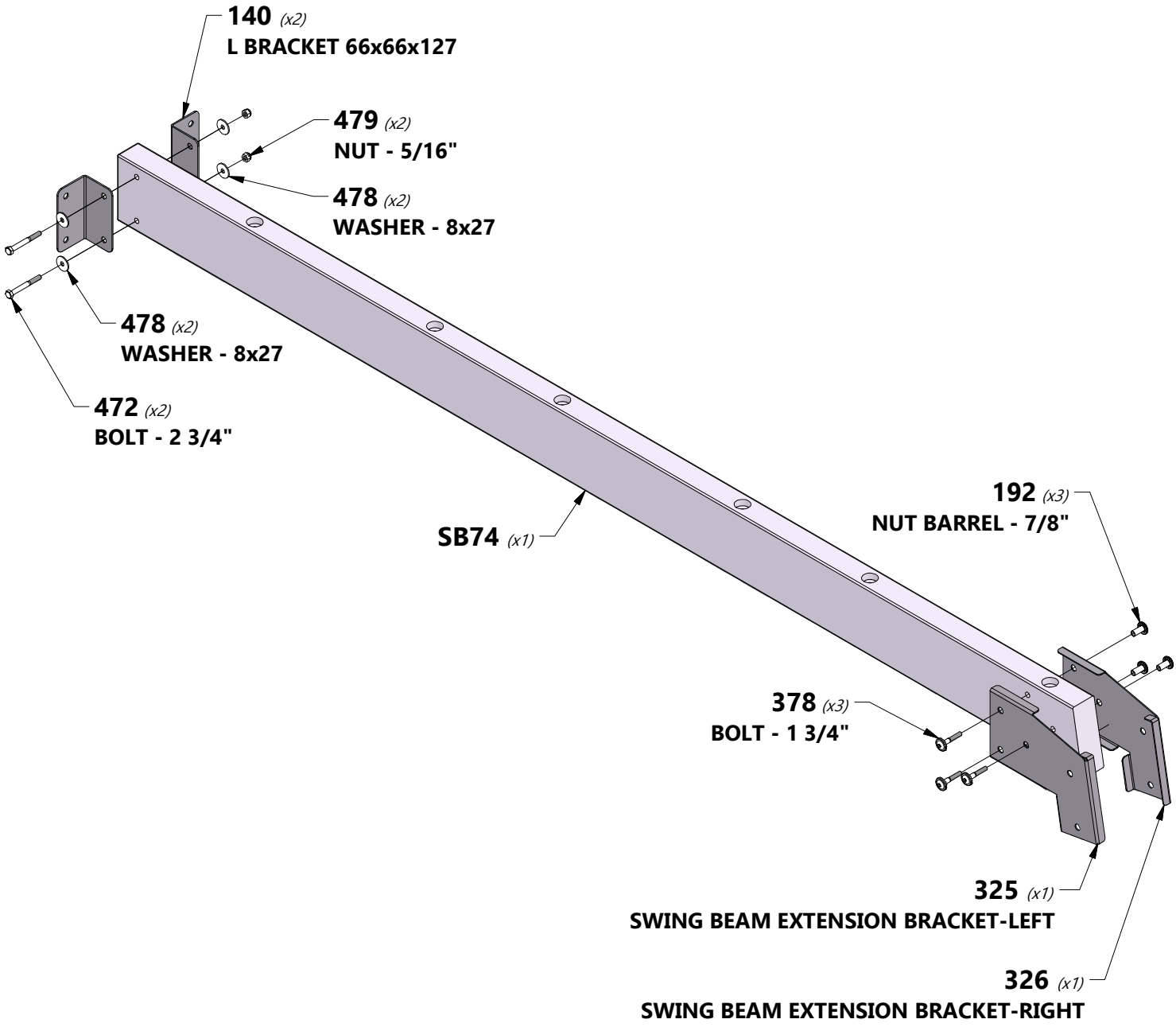

STEP 2 - SWING BEAM ASSEMBLY

QTY	PART NUMBER	DESCRIPTION
6	H100379	T-NUT 5/16 BLK
4	H100407	BOLT WH 5/16x1 1/2 BLK
2	H100503	BOLT WH 5/16x3-1/2 BLK

E77 *(x2)* | **ANGLE BRACE - W4L14540**
1 3/8"x3 3/8"x81" (36x86x2056)

W71 *(x1)* | **SWING BEAM SUPPORT - W4L14615**
2"x3 3/8"x50 3/8" (50x86x1280)

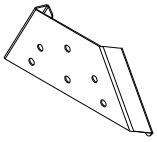

A4M01169 *(x1)* | **A-FRAME BRACKET**

TIP:
INSTALL T-NUTS IN WOOD FIRST

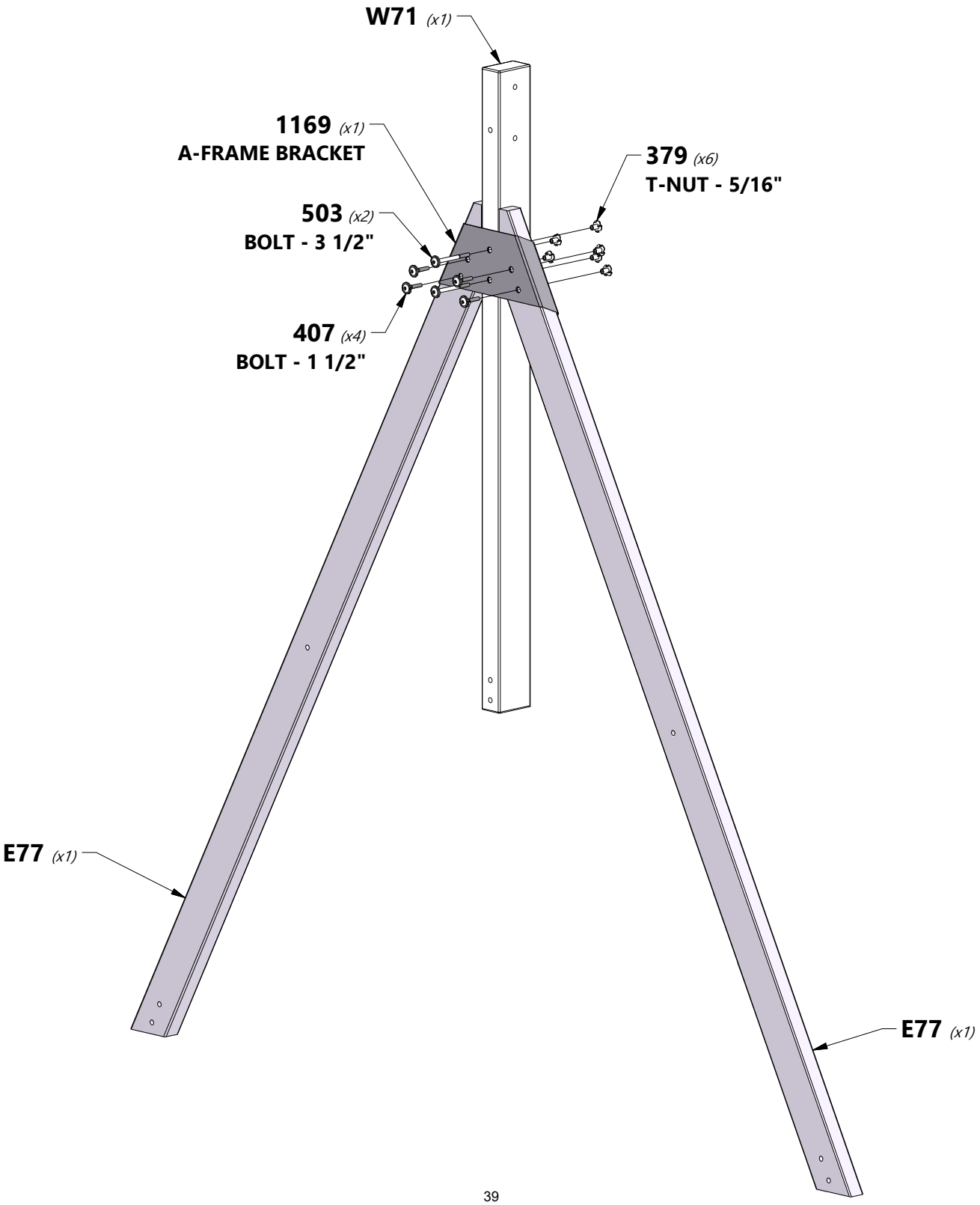

STEP 3 - SWING BEAM ASSEMBLY

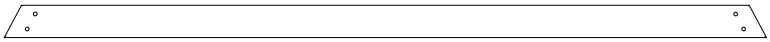

H80 *(x1)* | **GROUND BOARD - W4L14552**
1"x3 3/8"x79 1/2" (24x86x2018)

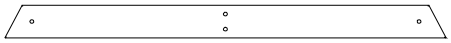

E50 *(x1)* | **END SUPPORT - W4L14538**
1 1/2"x3 1/2"x46" (36x86x1168)

QTY	PART NUMBER	DESCRIPTION
2	H100195	BOLT WH 5/16x2-3/4 BLK
8	H100198	WASHER LOCK EXT 8x19 BLK
4	H100205	BOLT WH 5/16x2-1/4 BLK
8	H100379	T-NUT 5/16 BLK
2	H100480	BOLT WH 5/16x4 3/4 BLK

TIP:
INSTALL T-NUTS IN WOOD FIRST

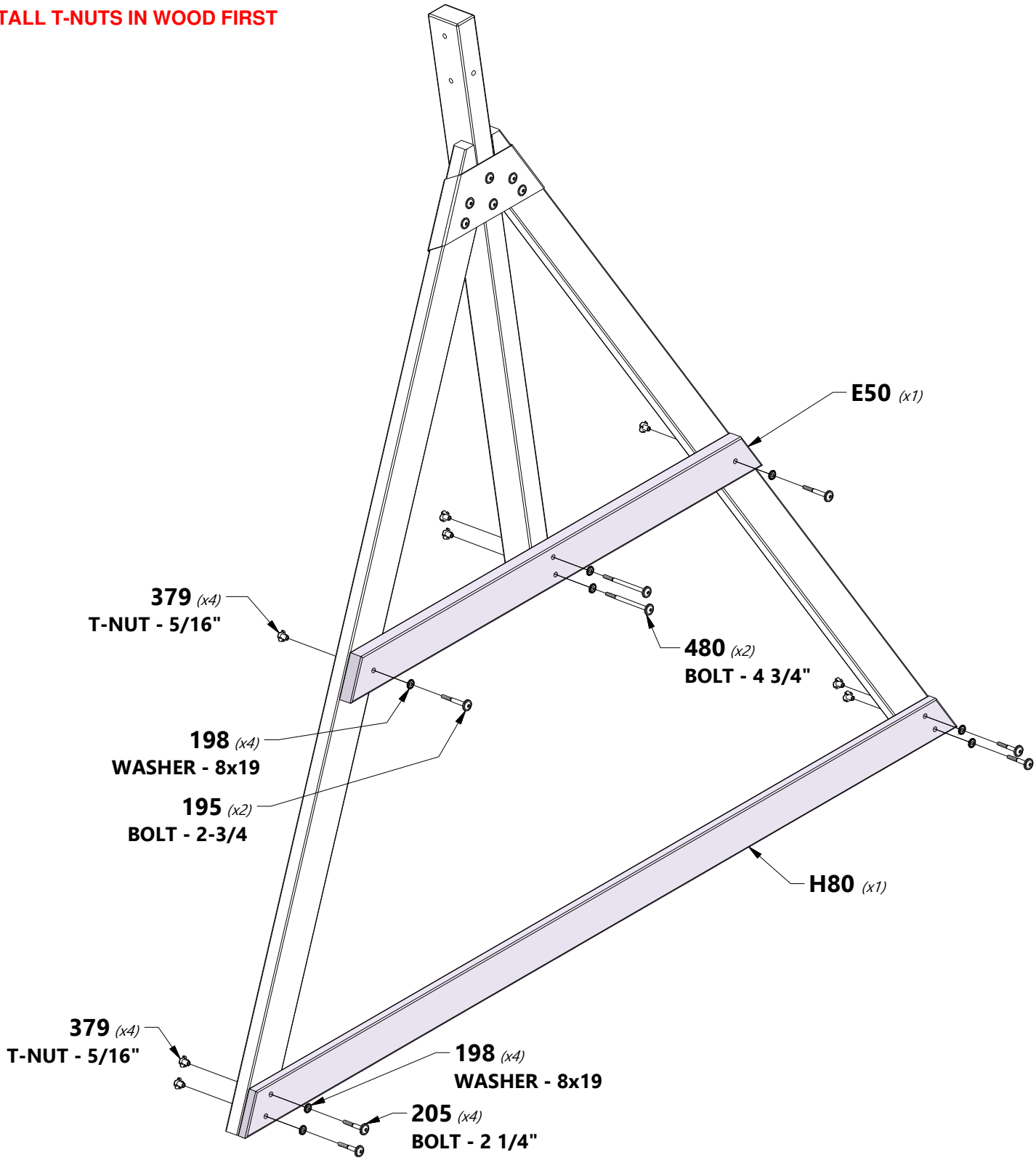

STEP 4 - SWING BEAM ASSEMBLY

QTY	PART NUMBER	DESCRIPTION
2	H100192	NUT BARREL WH 5/16x7/8 BLK
1	H100193	NUT BARREL WH 5/16x1-1/2 BLK
1	H100194	BOLT WH 5/16x2-1/2 BLK
2	H100378	BOLT WH 5/16x1 3/4 BLK

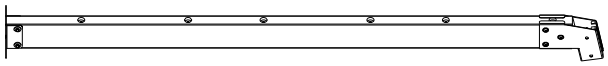

(x1) **SWING BEAM SUBASSEMBLY**

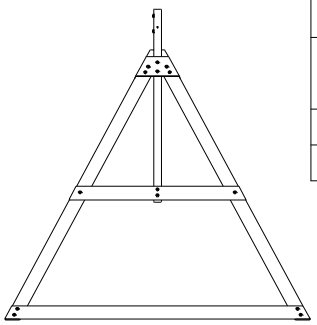

(x1) **SWING BEAM END SUBASSEMBLY**

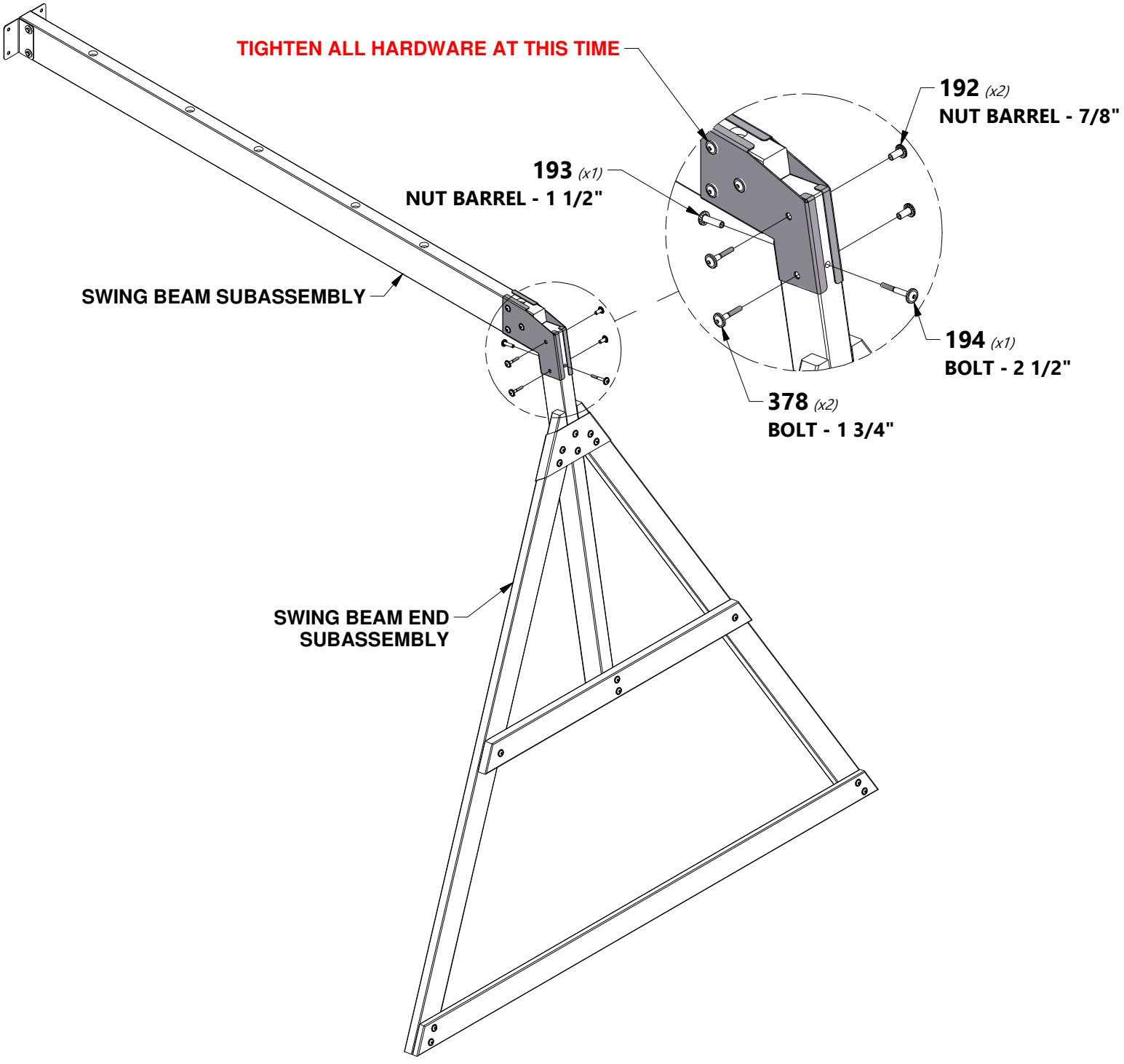

STEP 5 - SWING BEAM ASSEMBLY

QTY	PART NUMBER	DESCRIPTION
6	H100103	WASHER SAFETY 17x30
6	H100105	WASHER FLAT 8x27
6	H100110	NUT LOCK 5/16

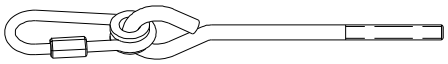

H100099 *(x6)* | **9 1/2" SWING HANGER QUICK LINK**

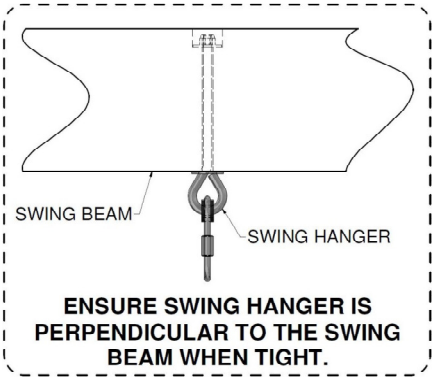

ENSURE SWING HANGER IS PERPENDICULAR TO THE SWING BEAM WHEN TIGHT.

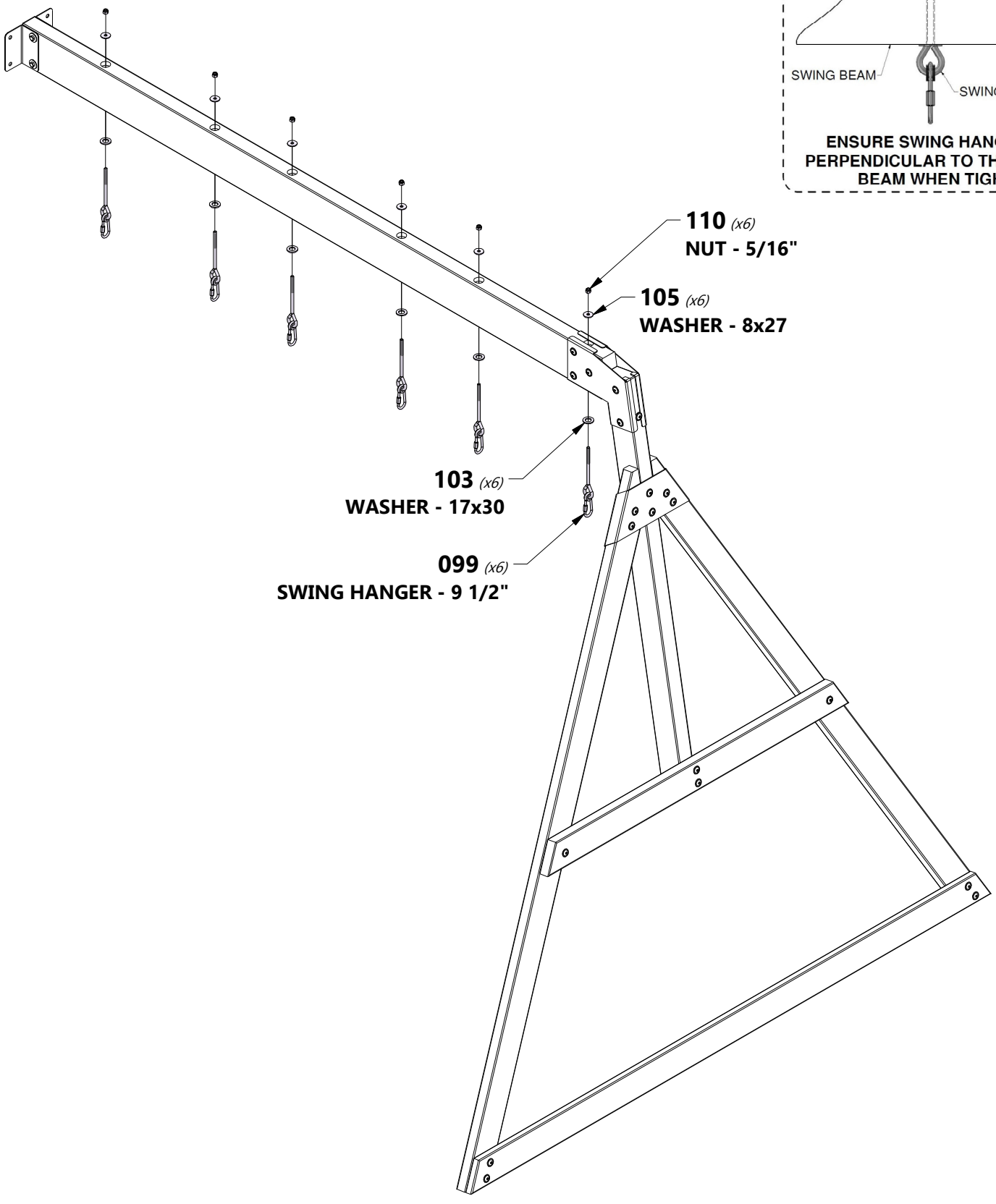

STEP 6 - SWING BEAM ASSEMBLY

QTY	PART NUMBER	DESCRIPTION
4	H100128	SCREW PWH 8x5/8

A100164 *(x1)* | **BYD ID TAG (LARGE) AGES 3-10**

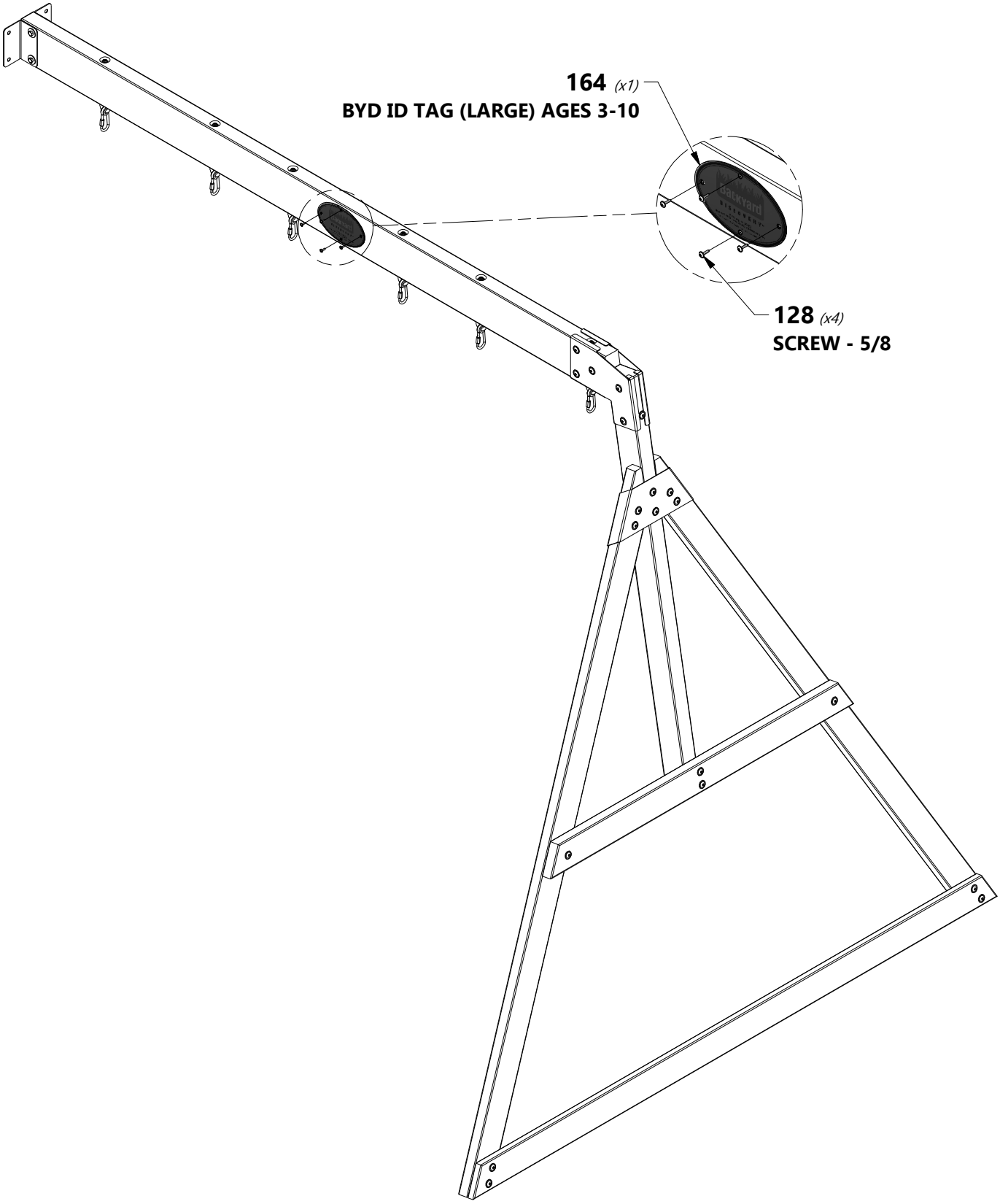

STEP 1A - FORT ASSEMBLY

QTY	PART NUMBER	DESCRIPTION
14	H100198	WASHER LOCK EXT 8x19 BLK
4	H100205	BOLT WH 5/16x2-1/4 BLK
12	H100379	T-NUT 5/16 BLK
8	H100457	BOLT WH 5/16x2 BLK
2	H100471	LAG SCREW WH 5/16x1-1/2 BLK

E1 | **UPRIGHT - W2A03132**
(x1) | *1 3/8"x3 3/8"x89 1/2" (36x86x2274)*

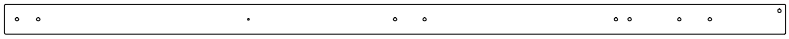

E3 | **UPRIGHT - W4L14533**
(x1) | *1 3/8"x3 3/8"x89 1/2" (36x86x2274)*

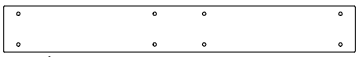

G1 | **SWING BEAM MOUNT - W4L14542**
(x1) | *1"x5 1/4"x40 3/8" (24x134x1024)*

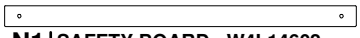

N1 | **SAFETY BOARD - W4L14602**
(x1) | *5/8"x2 3/8"x40 3/8" (16x60x1024)*

M7 | **FLOOR SUPPORT - W4L14577**
(x1) | *5/8"x3 3/8"x40 3/8" (16x86x1024)*

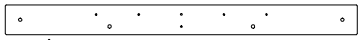

M8 | **FLOOR SUPPORT - W4L14578**
(x1) | *5/8"x3 3/8"x40 3/8" (16x86x1024)*

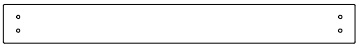

L4 | **WALL RAIL - W4L14566**
(x1) | *5/8"x4 3/8"x40 3/8" (16x112x1024)*

TIP:
INSTALL T-NUTS IN WOOD FIRST

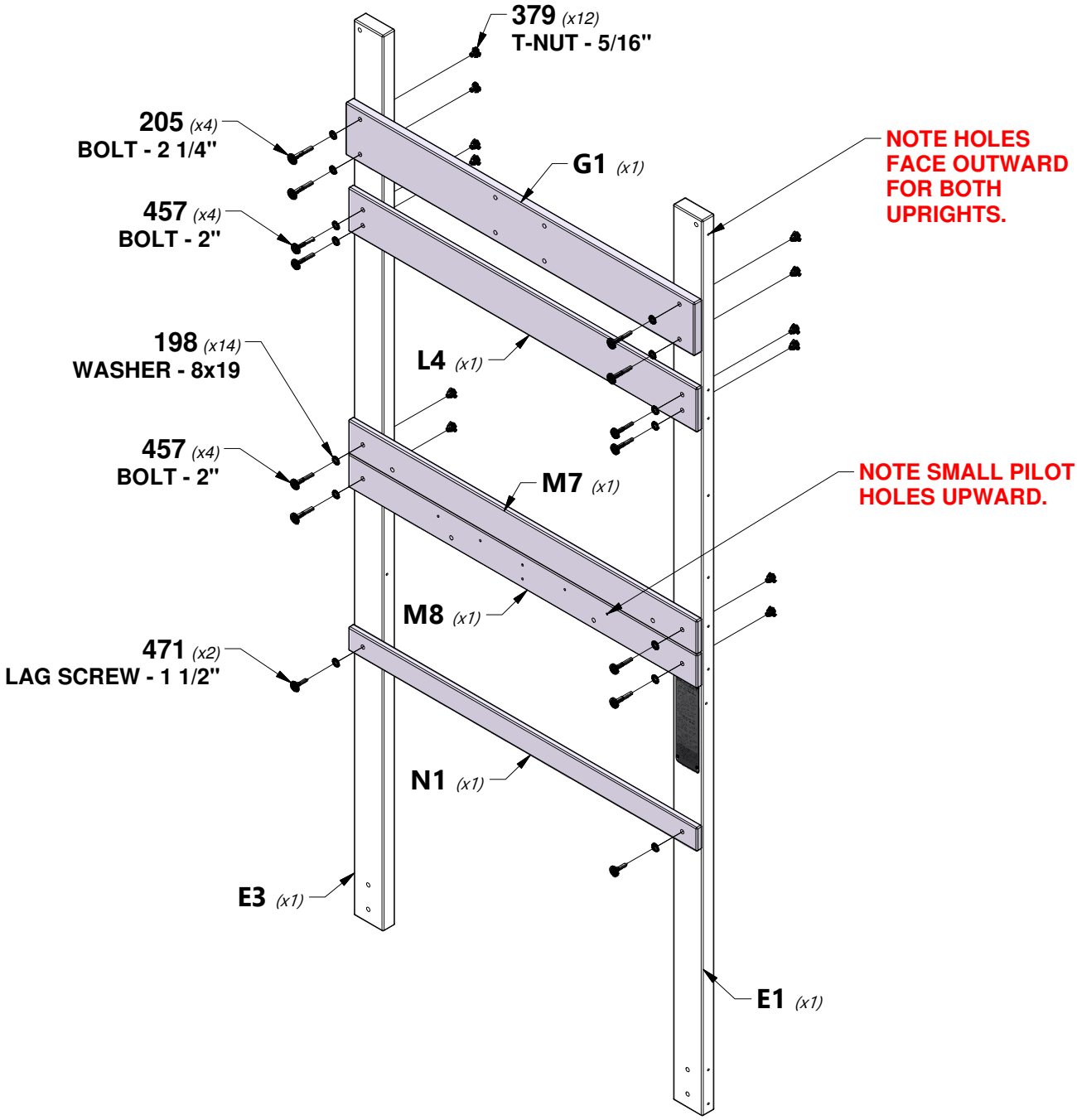

STEP 1B - FORT ASSEMBLY

K4 | **GROUND BOARD - W4L14560**
(x1) | *5/8"x5 1/4"x78 1/4" (16x134x1986)*

H6 | **ANGLE BRACE - W4L14549**
(x2) | *15/16"x3 3/8"x47" (24x86x1194)*

QTY	PART NUMBER	DESCRIPTION
8	H100198	WASHER LOCK EXT 8x19 BLK
8	H100379	T-NUT 5/16 BLK
2	H100405	WASHER LOCK EXT 6x15 BLK
4	H100407	BOLT WH 5/16x1 1/2 BLK
4	H100457	BOLT WH 5/16x2 BLK
2	H100487	LAG SCREW WH 1/4x2 BLK

TIP:
INSTALL T-NUTS IN WOOD FIRST

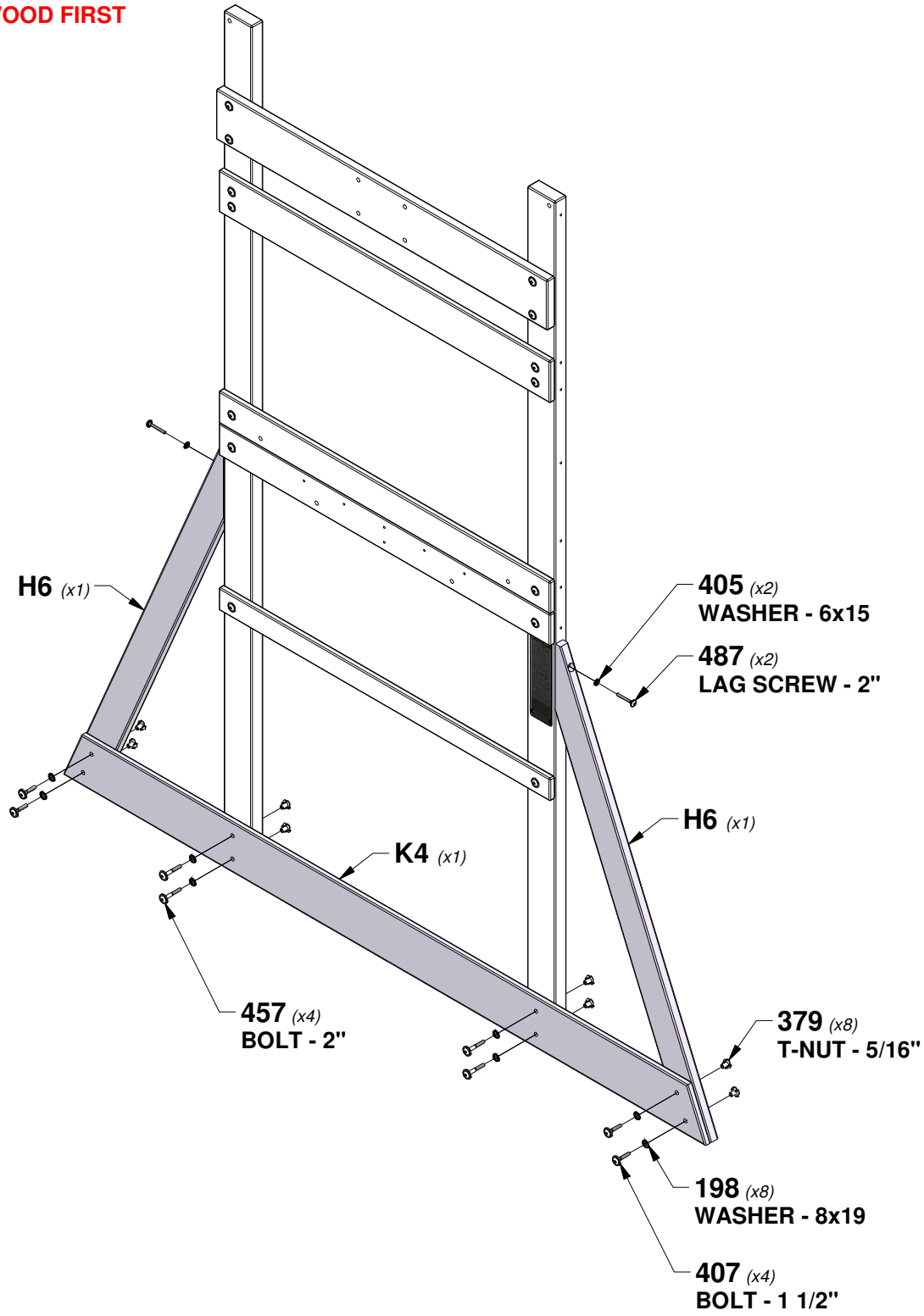

STEP 2 - FORT ASSEMBLY

QTY	PART NUMBER	DESCRIPTION
18	H100198	WASHER LOCK EXT 8x19 BLK
18	H100458	LAG SCREW WH 5/16x2 BLK

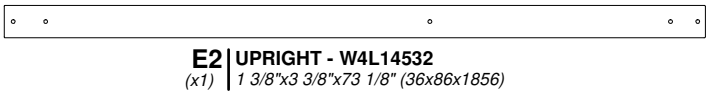

E2 | **UPRIGHT - W4L14532**
(x1) | *1 3/8"x3 3/8"x73 1/8" (36x86x1856)*

E5 | **UPRIGHT - W4L14535**
(x1) | *1 3/8"x3 3/8"x73 1/8" (36x86x1856)*

L1 | **WALL RAIL - W4L14563**
(x1) | *5/8"x4 3/8"x40 3/8" (16x112x1024)*

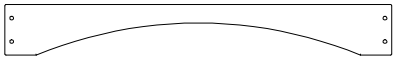

K3 | **FLOOR SUPPORT - W4L14559**
(x1) | *5/8"x5 1/4"x40 3/8" (16x134x1024)*

K2 | **GROUND BOARD - W4L14558**
(x1) | *5/8"x5 1/4"x40 3/8" (16x134x1024)*

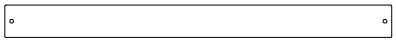

M2 | **FLOOR SUPPORT - W4L14572**
(x2) | *5/8"x3 3/8"x40 3/8" (16x86x1024)*

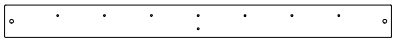

M3 | **FLOOR SUPPORT - W4L14573**
(x1) | *5/8"x3 3/8"x40 3/8" (16x86x1024)*

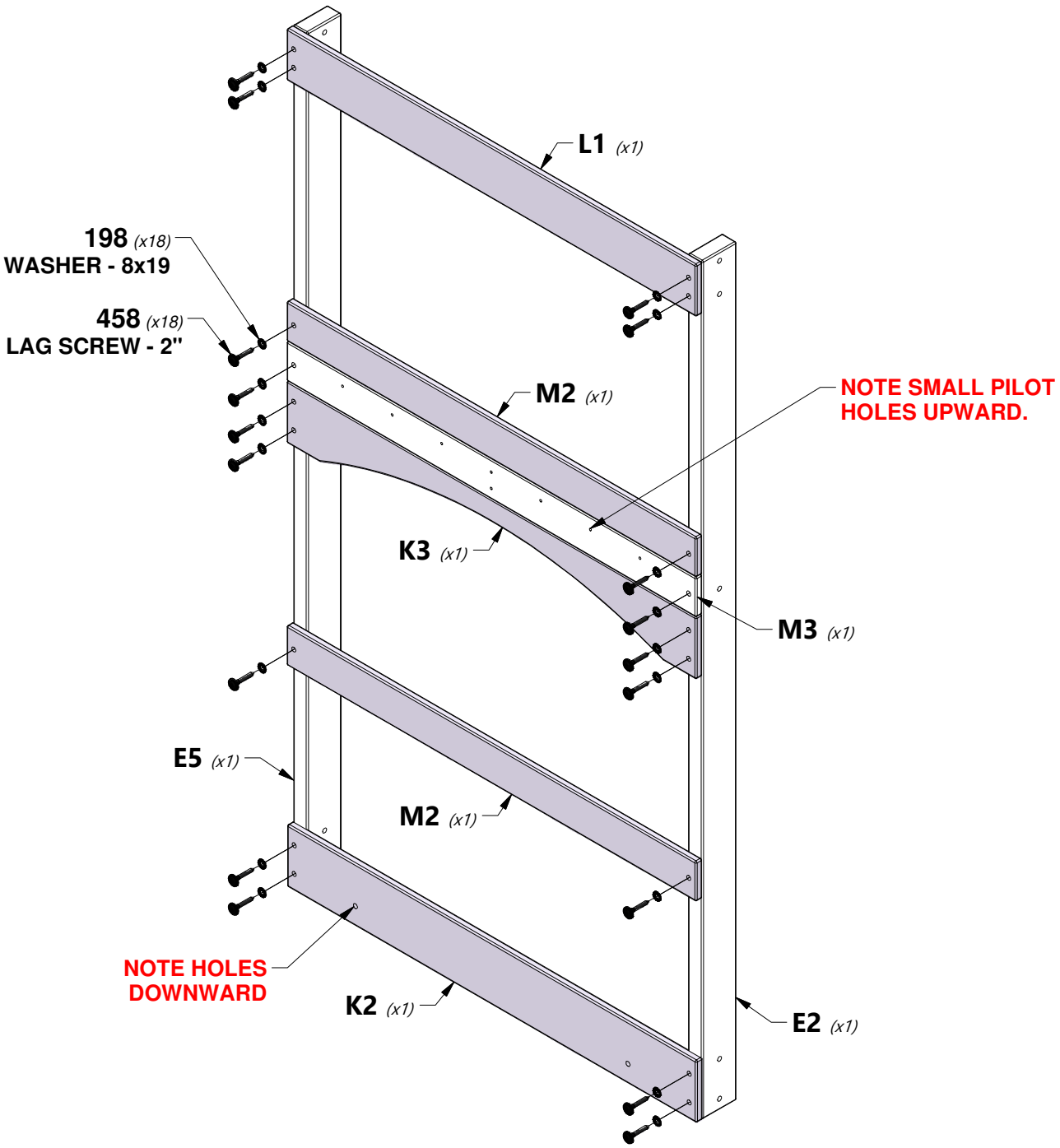

STEP 3 - FORT ASSEMBLY

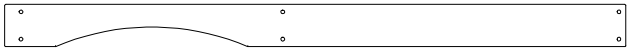

L2 | **WALL RAIL - W4L14564**
(x1) | *5/8"x4 3/8"x64 3/4" (16x112x1644)*

L3 | **WALL RAIL - W4L14565**
(x1) | *5/8"x4 3/8"x64 3/4" (16x112x1644)*

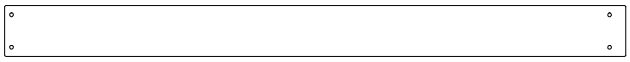

K1 | **GROUND BOARD - W4L14557**
(x2) | *5/8"x5 1/4"x64 3/4" (16x134x1644)*

QTY	PART NUMBER	DESCRIPTION
20	H100198	WASHER LOCK EXT 8x19 BLK
12	H100379	T-NUT 5/16 BLK
10	H100457	BOLT WH 5/16x2 BLK
10	H100458	LAG SCREW WH 5/16x2 BLK

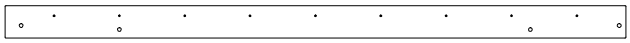

M1 | **FLOOR SUPPORT - W4L14571**
(x1) | *5/8"x3 3/8"x64 3/4" (16x86x1644)*

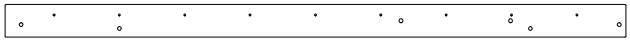

M30 | **FLOOR SUPPORT - W4L14598**
(x1) | *5/8"x3 3/8"x64 3/4" (16x86x1644)*

TIP:
INSTALL T-NUTS IN WOOD FIRST

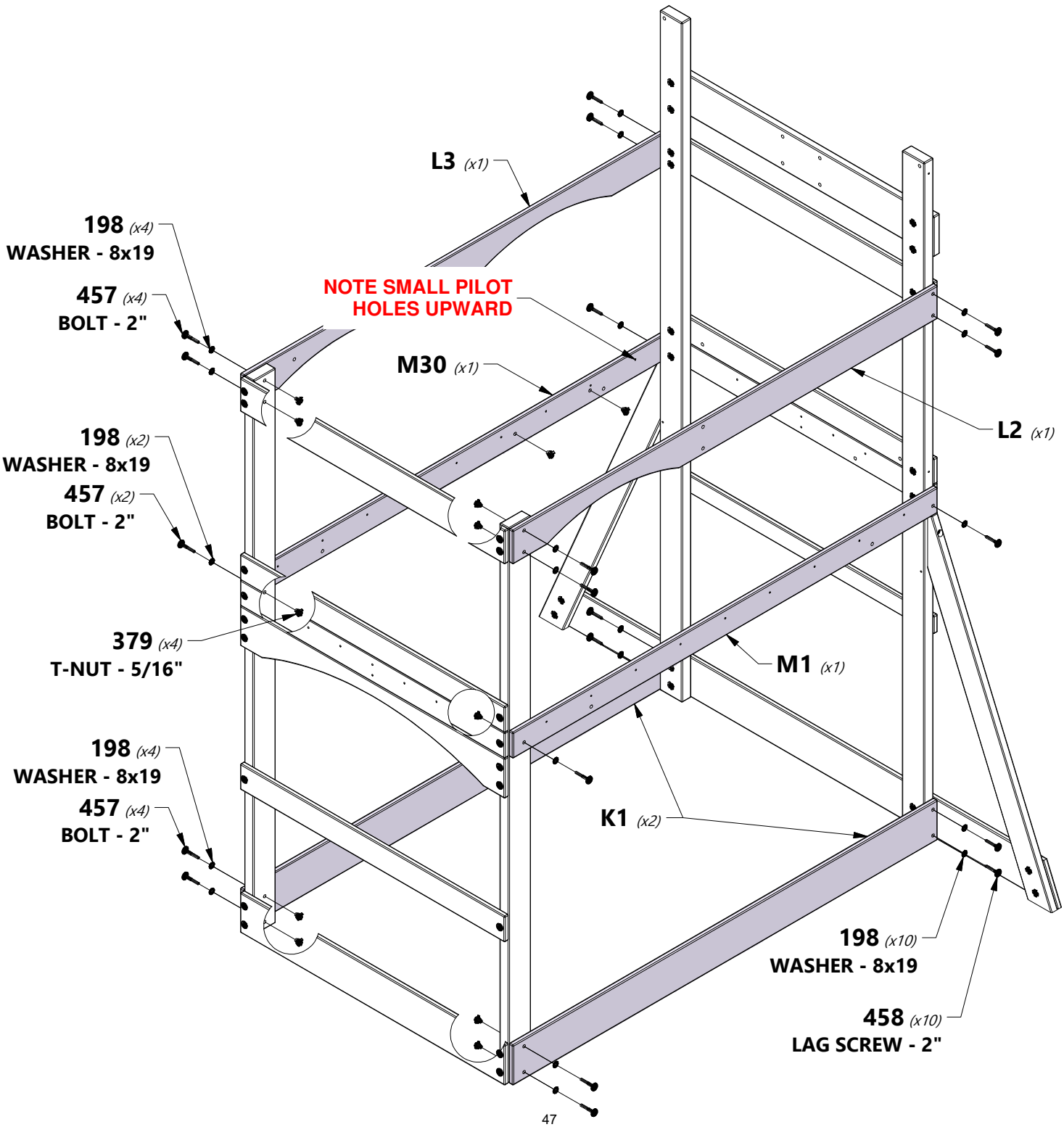

STEP 4 - FORT ASSEMBLY

F1 *(x6)* | **DECK BRACE - W4L14541**
1"x2 3/8"x15 3/4" (24x60x400)

QTY	PART NUMBER	DESCRIPTION
6	H100198	WASHER LOCK EXT 8x19 BLK
6	H100379	T-NUT 5/16 BLK
6	H100405	WASHER LOCK EXT 6x15 BLK
6	H100407	BOLT WH 5/16x1 1/2 BLK
6	H100487	LAG SCREW WH 1/4x2 BLK

TIP:
INSTALL T-NUTS IN WOOD FIRST

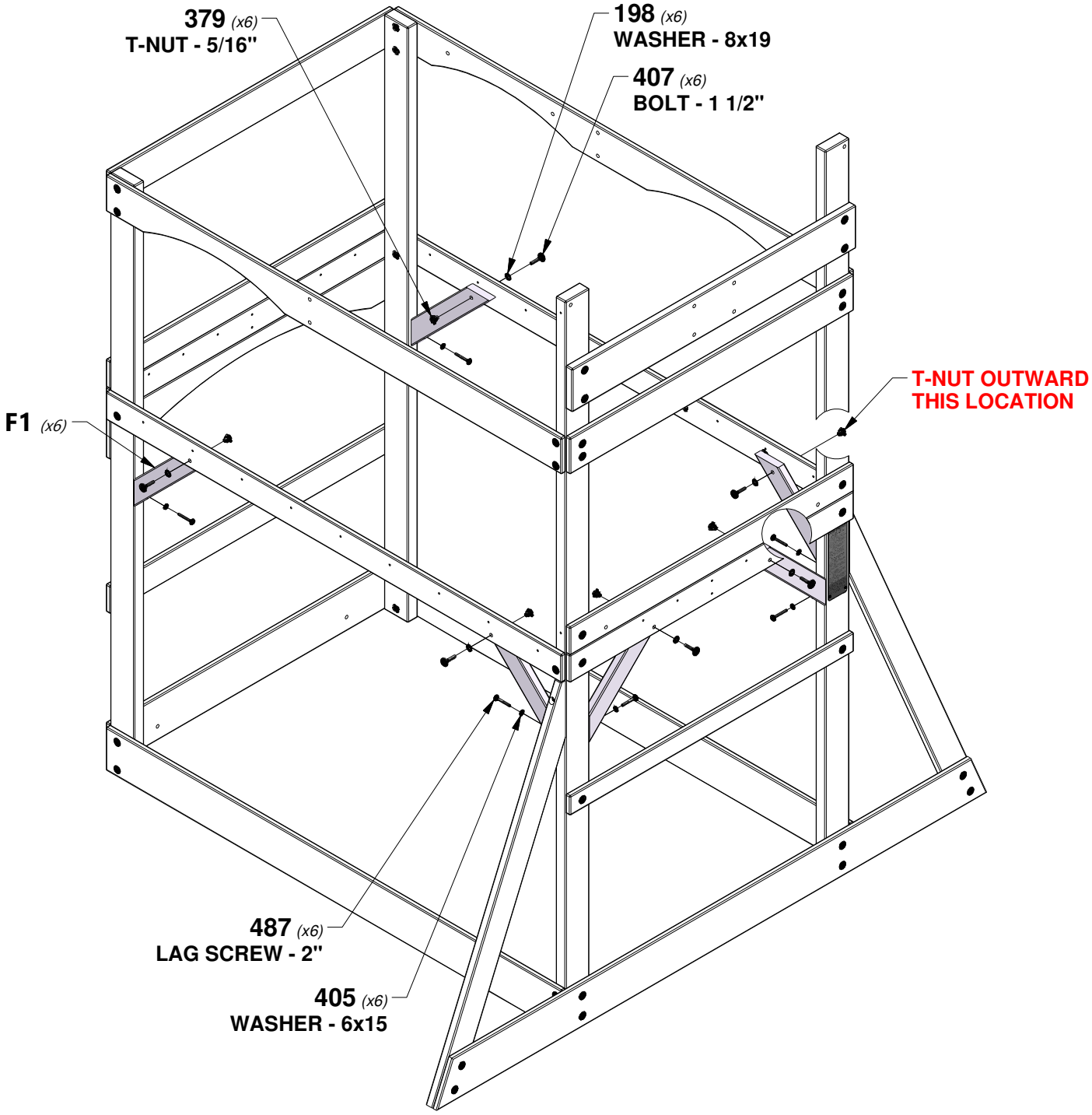

STEP 5 - FORT ASSEMBLY

QTY	PART NUMBER	DESCRIPTION
46	H100088	SCREW PFH 8x1-1/8"

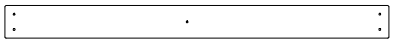

M9 (x2) | **WALL BOARD - W4L14579**
5/8"x3 3/8"x40" (16x86x1016)

M10 (x9) | **WALL BOARD - W4L14580**
5/8"x3 3/8"x20" (16x86x508)

TIP:
INSTALL T-NUTS IN WOOD FIRST

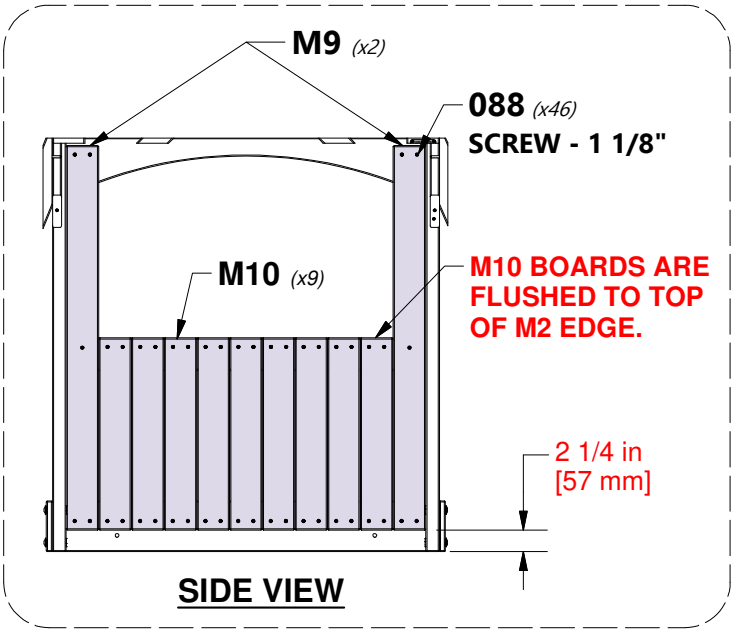

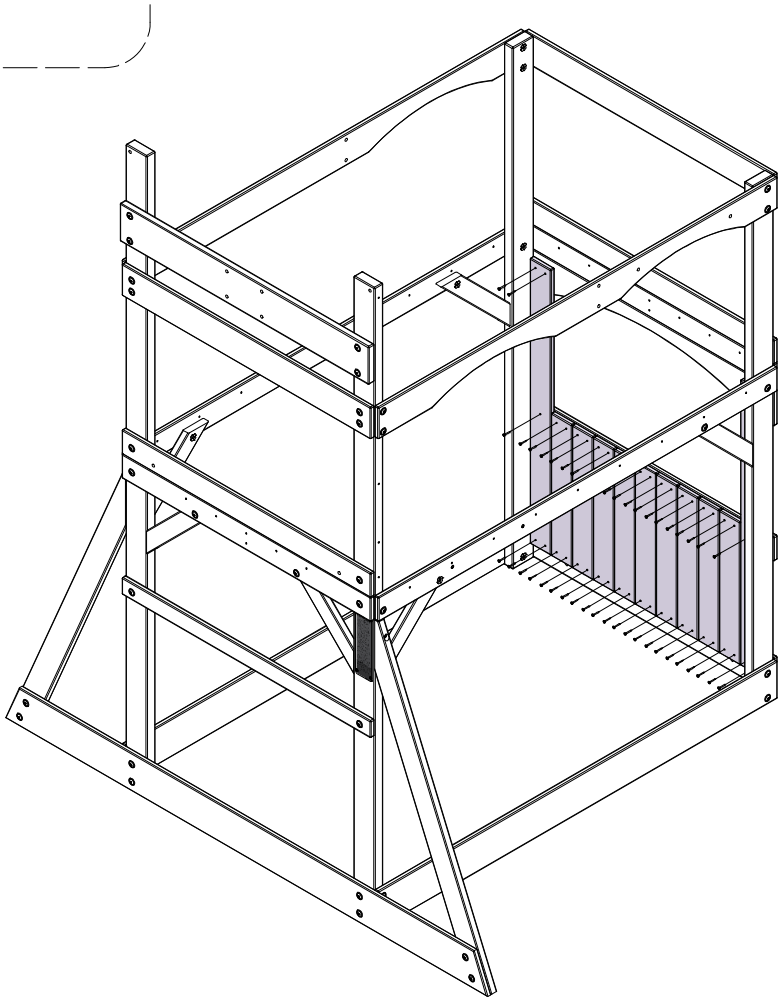

STEP 6 - FORT ASSEMBLY

QTY	PART NUMBER	DESCRIPTION
7	H100087	SCREW PFH 8x1-1/4"

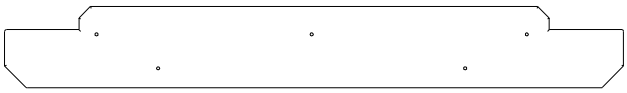

K5 (x1) | **COUNTER TOP - W4L14561**
5/8"x5 1/4"x40 3/8" (16x134x1024)

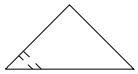

H1 (x2) | **TABLE SUPPORT - W4L14543**
1"x2"x4" (24x51x102)

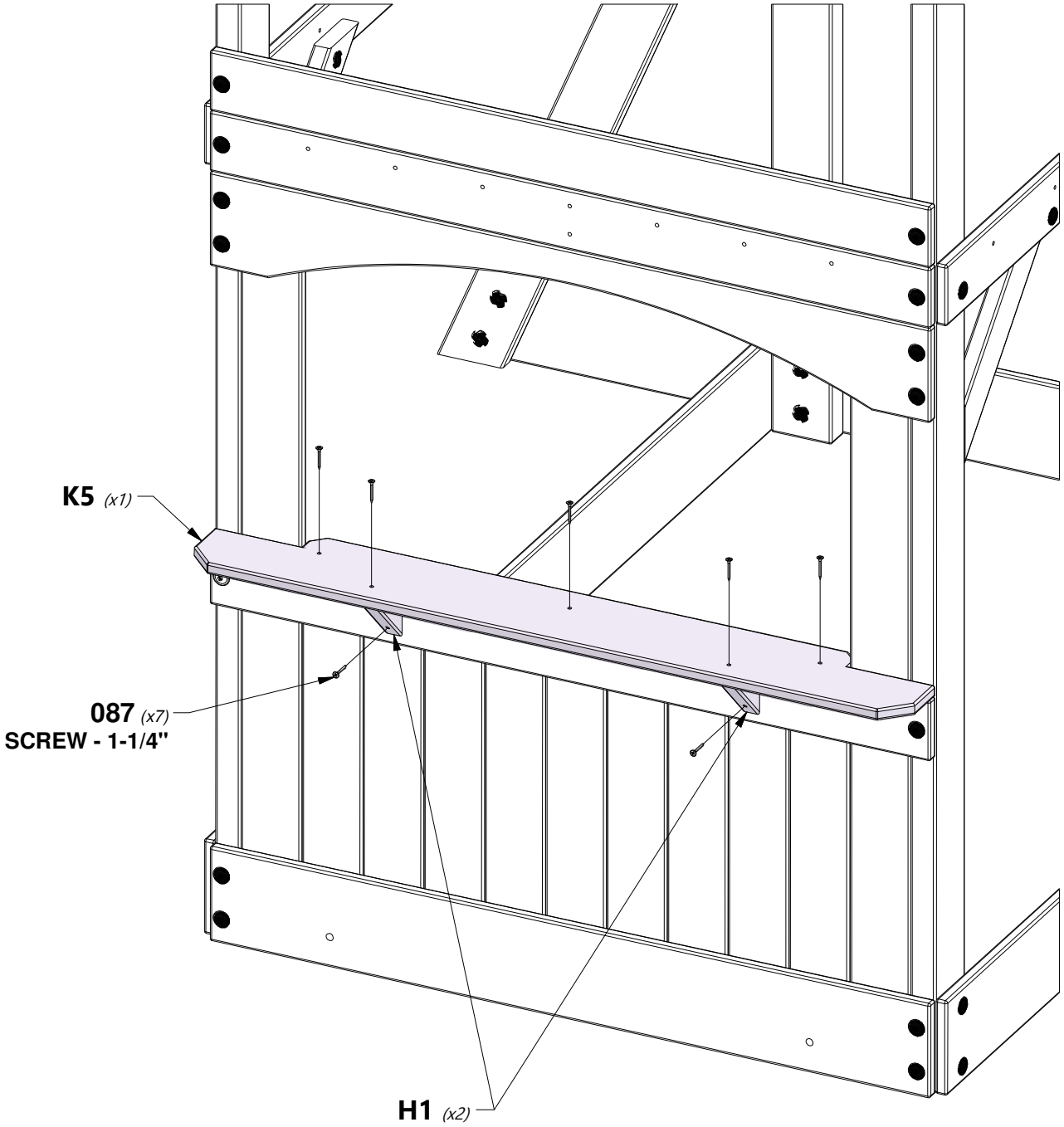

STEP 7 - FORT ASSEMBLY

QTY	PART NUMBER	DESCRIPTION
28	H100086	SCREW PFH 8x1-1/2"

S1 (x2) | **FLOOR SUPPORT - W4L14612**
1"x1"x59 7/8" (24x24x1522)

S2 (x1) | **FLOOR SUPPORT - W4L14613**
1"x1"x37 1/2" (24x24x952)

S3 (x1) | **FLOOR SUPPORT - W4L14614**
1"x1"x33 1/2" (24x24x852)

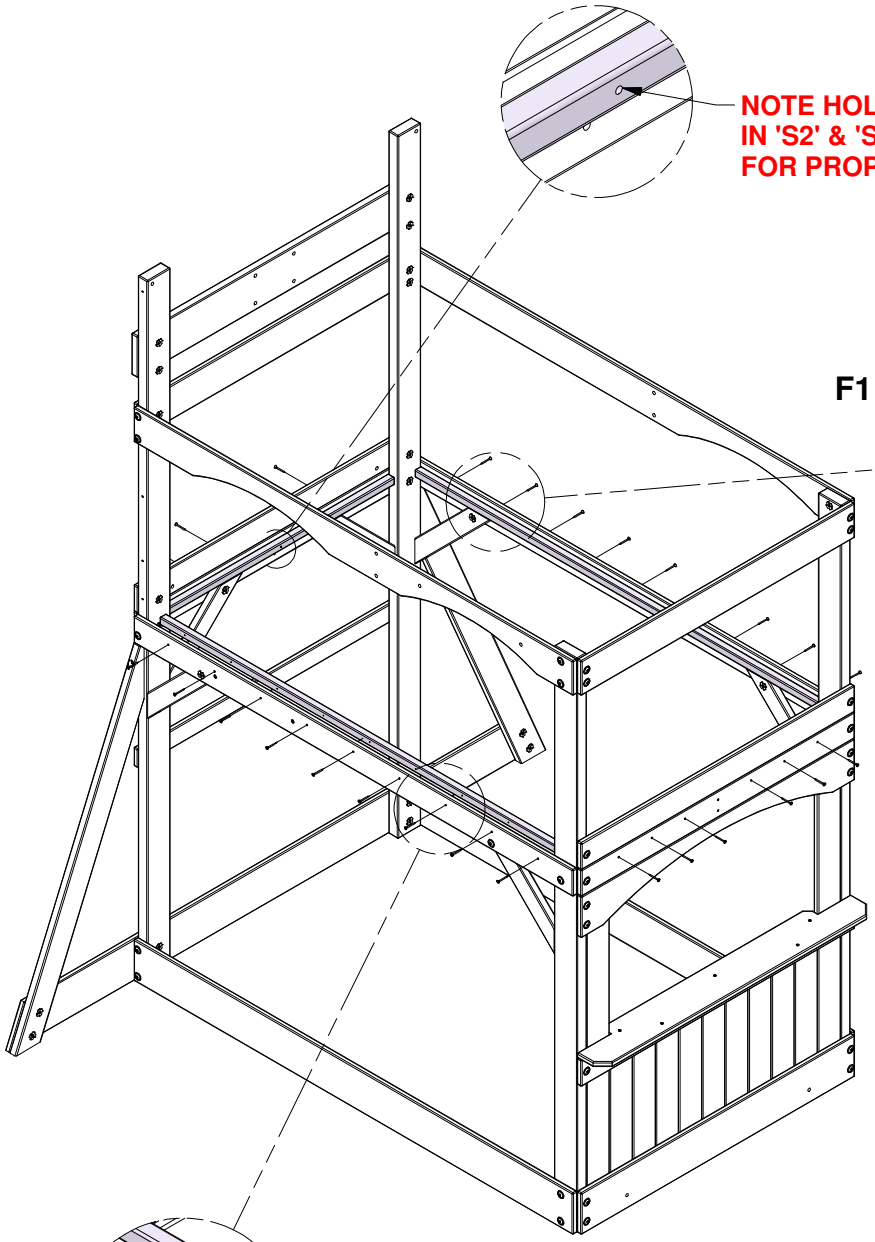

NOTE HOLE LOCATION IN 'S2' & 'S3' BOARDS FOR PROPER ASSEMBLY.

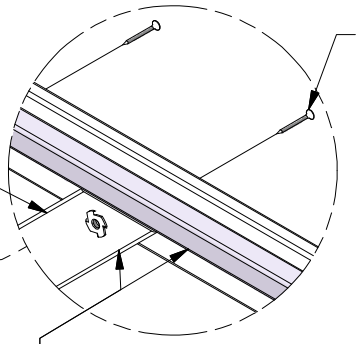

086 *(x28)*
SCREW - 1 1/2"

F1

NOTE: S1 AND S3 BOARDS SHOULD SIT ON F1 BRACE BOARDS. TOP OF S2 BOARD IS FLUSH WITH THE TOP OF BOTH S1 BOARDS.

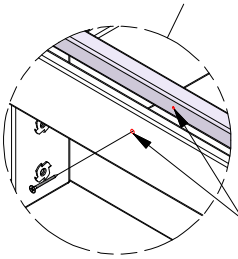

ALIGN PILOT HOLES IN (S) BOARDS WITH THRU HOLES IN THIER MATING BOARDS.

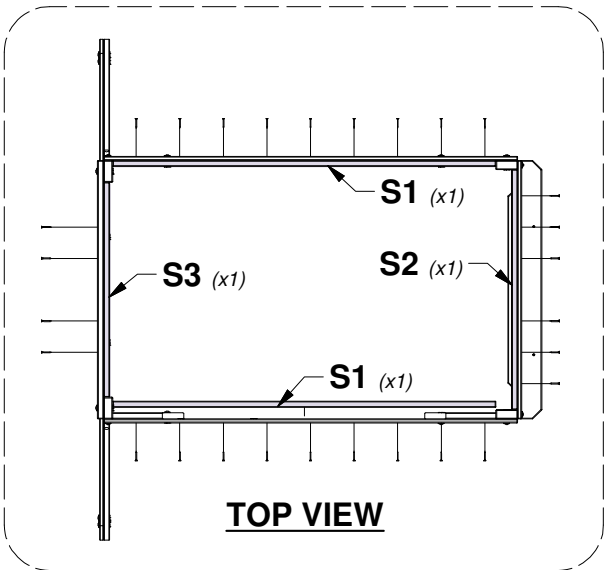

TOP VIEW

STEP 8 - FORT ASSEMBLY

QTY	PART NUMBER	DESCRIPTION
4	H100090	SCREW PFH 8x2 1/2

J1 | **JOIST - W4L14556**
(x1) | *1"x2 3/8"x64 3/4" (24x60x1644)*

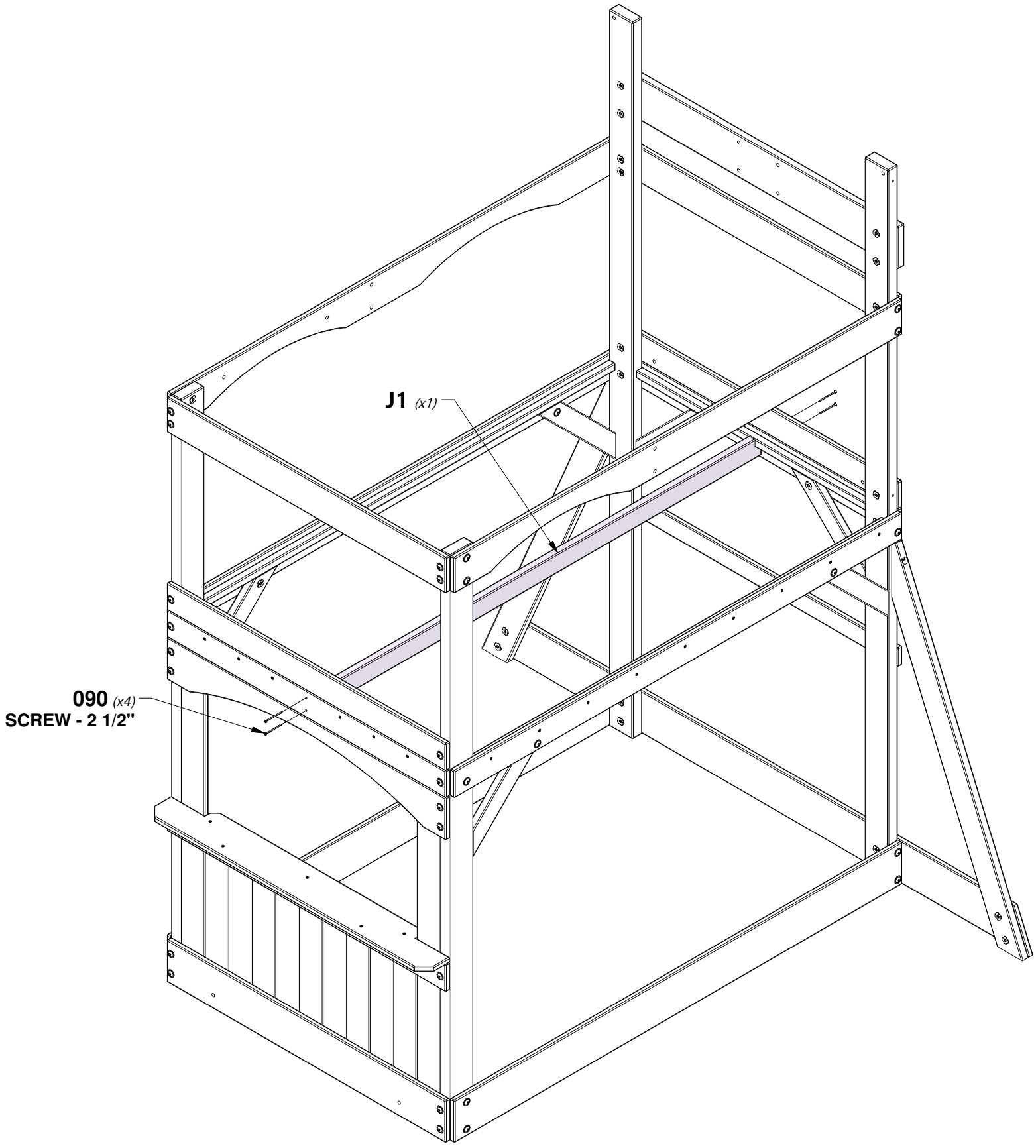

STEP 9 - FORT ASSEMBLY

QTY	PART NUMBER	DESCRIPTION
91	H100086	SCREW PFH 8x1-1/2"

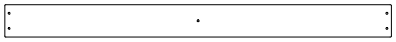

M4 (x2) | **FLOOR BOARD - W4L14574**
5/8"x3 3/8"x40 3/8" (16x86x1024)

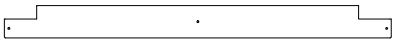

M5 (x1) | **FLOOR BOARD - W4L14575**
5/8"x3 3/8"x40 3/8" (16x86x1024)

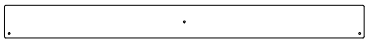

M6 (x1) | **FLOOR BOARD - W4L14576**
5/8"x3 3/8"x37 1/2" (16x86x952)

FP1 (x3) | **FLOOR PANEL - W2A03131**
1 1/4"x17"x40 5/16" (32x432x1024)

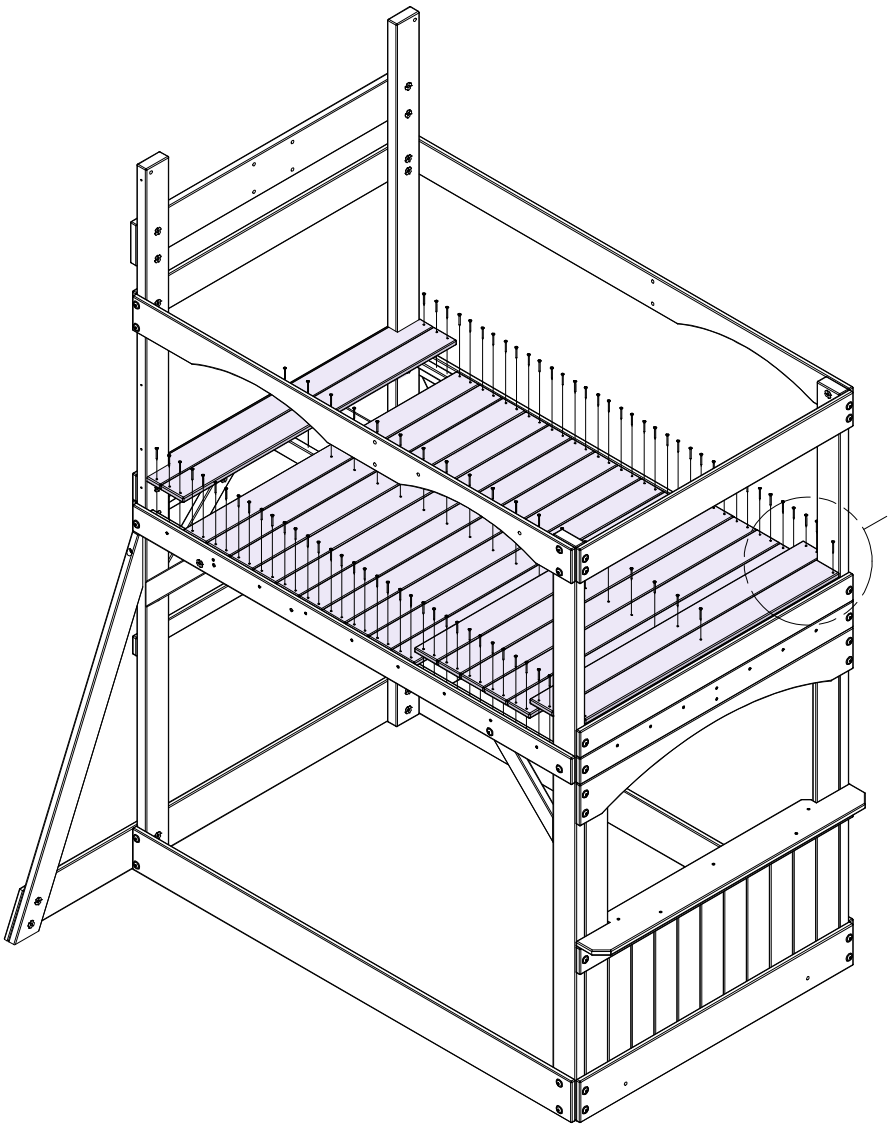

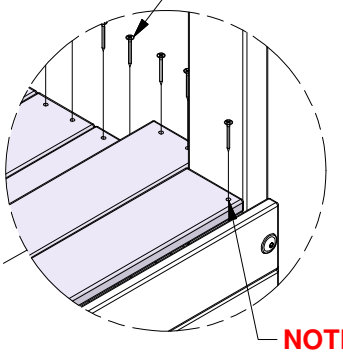

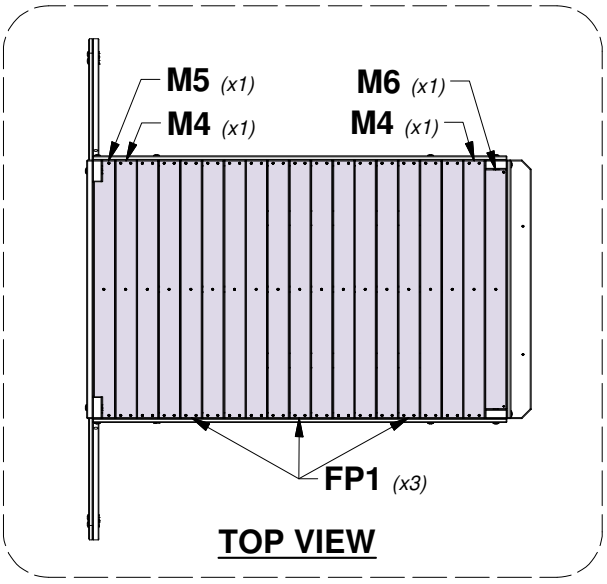

STEP 10 - FORT ASSEMBLY

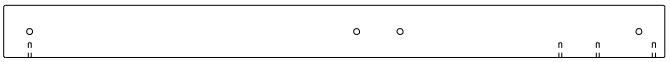

E4 | **CLUB HOUSE LEG - W4L14534**
(x1) | *1 3/8"x3 3/8"x43 1/8" (36x86x1094)*

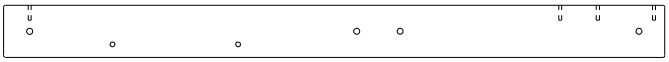

E8 | **CLUB HOUSE LEG - W4L14537**
(x1) | *1 3/8"x3 3/8"x43 1/8" (36x86x1094)*

QTY	PART NUMBER	DESCRIPTION
4	H100198	WASHER LOCK EXT 8x19 BLK
4	H100379	T-NUT 5/16 BLK
4	H100457	BOLT WH 5/16x2 BLK

TIP:
INSTALL T-NUTS IN WOOD FIRST

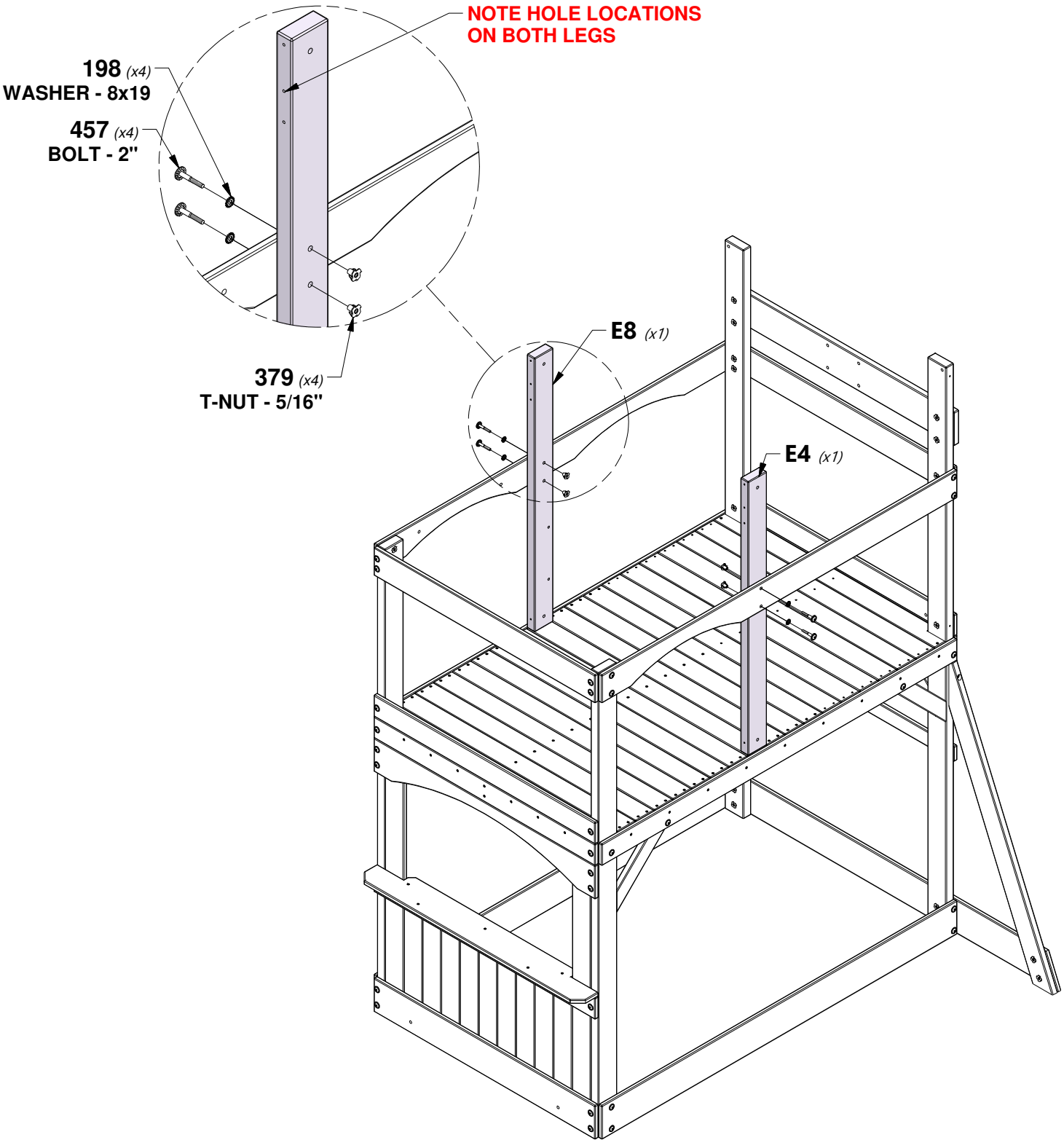

STEP 11 - FORT ASSEMBLY

M11 (x1) | **FLOOR SUPPORT - W4L14581** | *5/8"x3 3/8"x37 1/2" (16x86x951)*

M15 (x2) | **WALL RAIL - W4L14585** | *5/8"x3 3/8"x8 1/2" (16x86x216)*

M17 (x1) | **WALL RAIL - W4L14587** | *5/8"x3 3/8"x6 3/4" (16x86x173)*

M18 (x1) | **WALL RAIL - W4L14588** | *5/8"x3 3/8"x4 3/4" (16x86x122)*

A4M01046 (x2) | **L BRACKET 2.5x38x55x55**

QTY	PART NUMBER	DESCRIPTION
2	H100192	NUT BARREL WH 5/16x7/8 BLK
4	H100198	WASHER LOCK EXT 8x19 BLK
2	H100199	WASHER LOCK EXT 12x19 BLK
2	H100378	BOLT WH 5/16x1 3/4 BLK
2	H100379	T-NUT 5/16 BLK
2	H100396	BOLT WH 5/16x1/2 BLK
4	H100458	LAG SCREW WH 5/16x2 BLK

TIP:
INSTALL T-NUTS IN WOOD FIRST

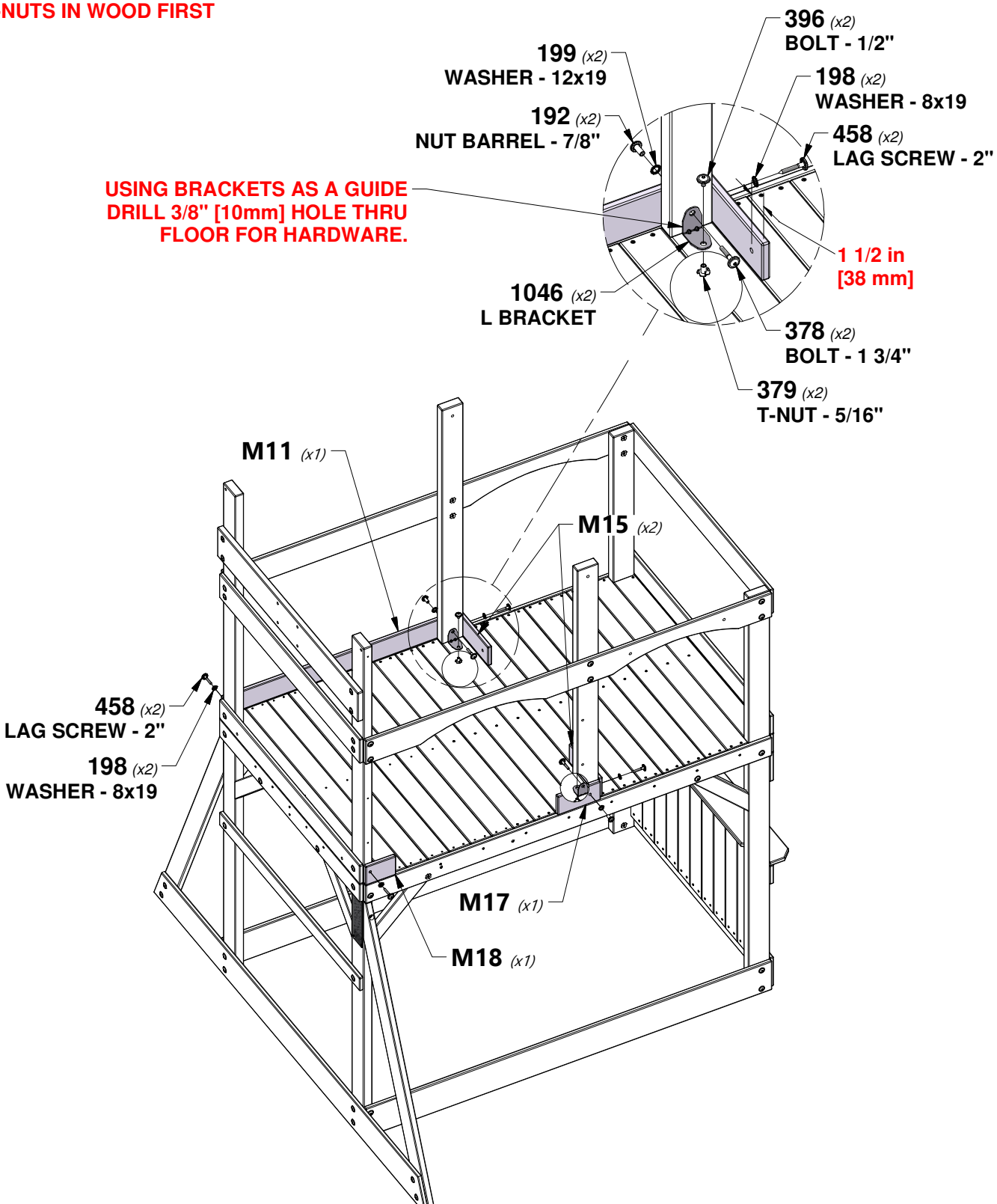

STEP 12 - FORT ASSEMBLY

QTY	PART NUMBER	DESCRIPTION
12	H100088	SCREW PFH 8x1-1/8"

N2 *(x6)* | **PICKET - W4L14603**
5/8"x2 3/8"x22" (16x60x558)

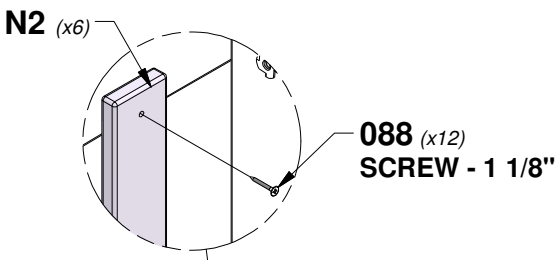

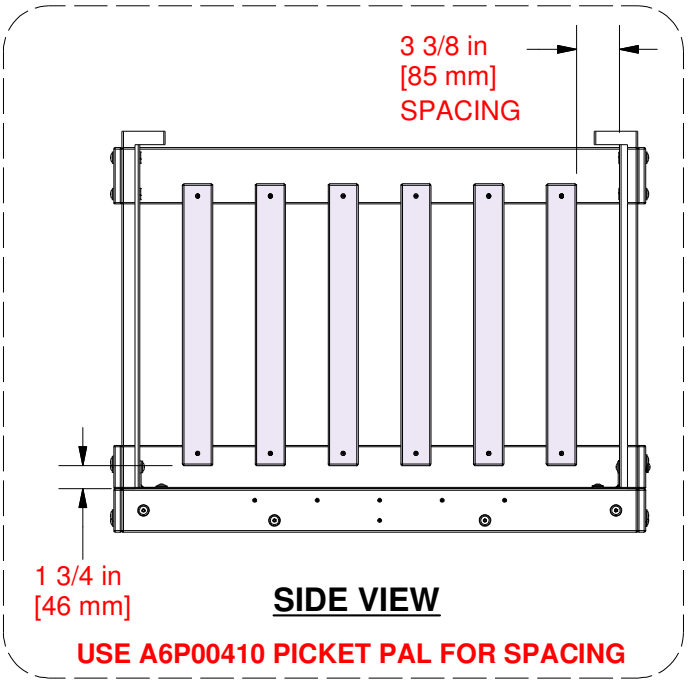

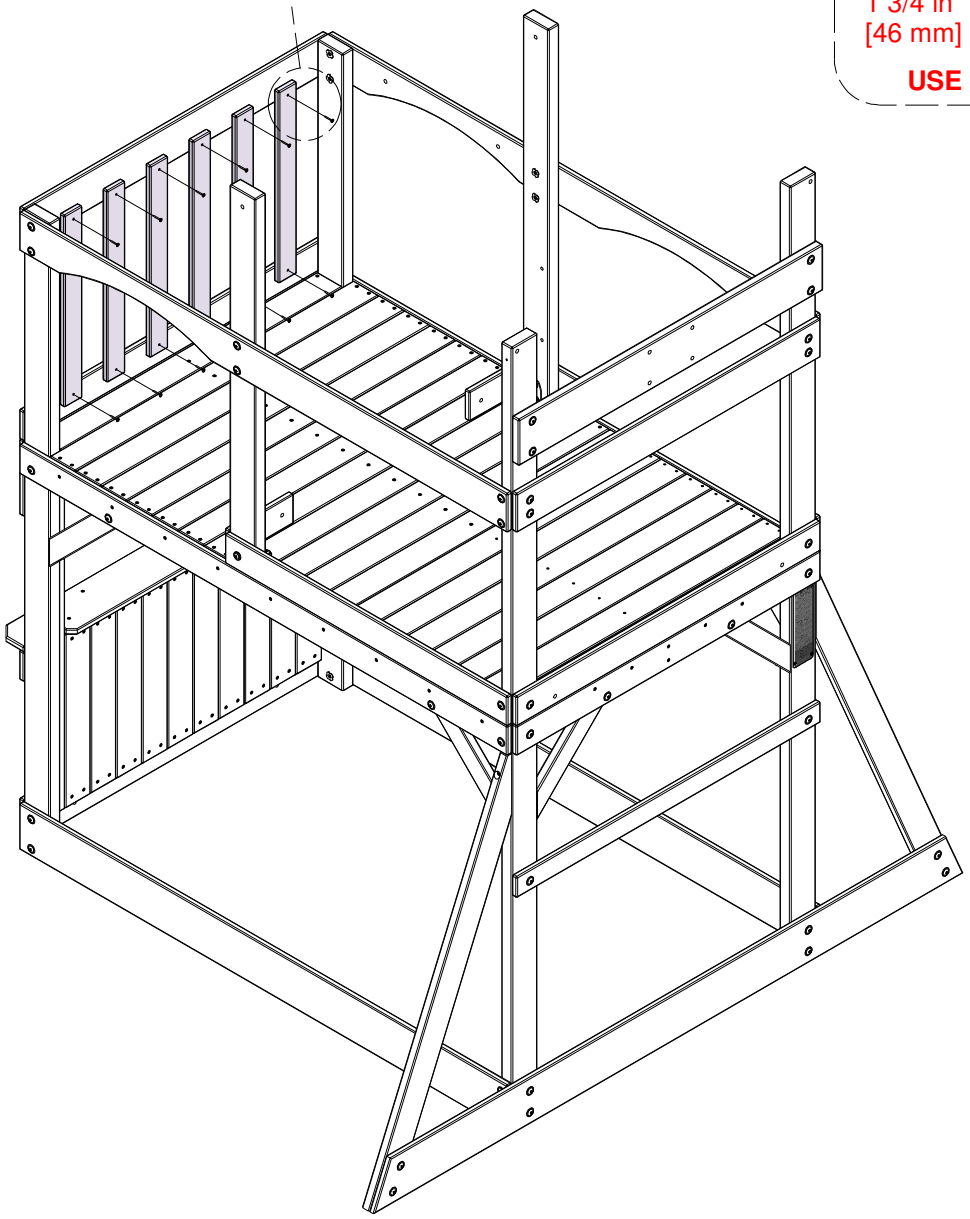

STEP 13 - FORT ASSEMBLY

L5 | **CLUB HOUSE WALL RAIL - W4L14567**
(x1) | *5/8"x4 3/8"x40 3/8" (16x112x1024)*

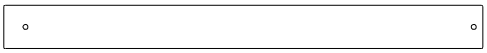

M21 | **WALL RAIL - W4L14591**
(x2) | *5/8"x3 3/8"x37 1/2" (16x86x951)*

QTY	PART NUMBER	DESCRIPTION
8	H100198	WASHER LOCK EXT 8x19 BLK
2	H100379	T-NUT 5/16 BLK
2	H100457	BOLT WH 5/16x2 BLK
6	H100458	LAG SCREW WH 5/16x2 BLK

TIP:
INSTALL T-NUTS IN WOOD FIRST

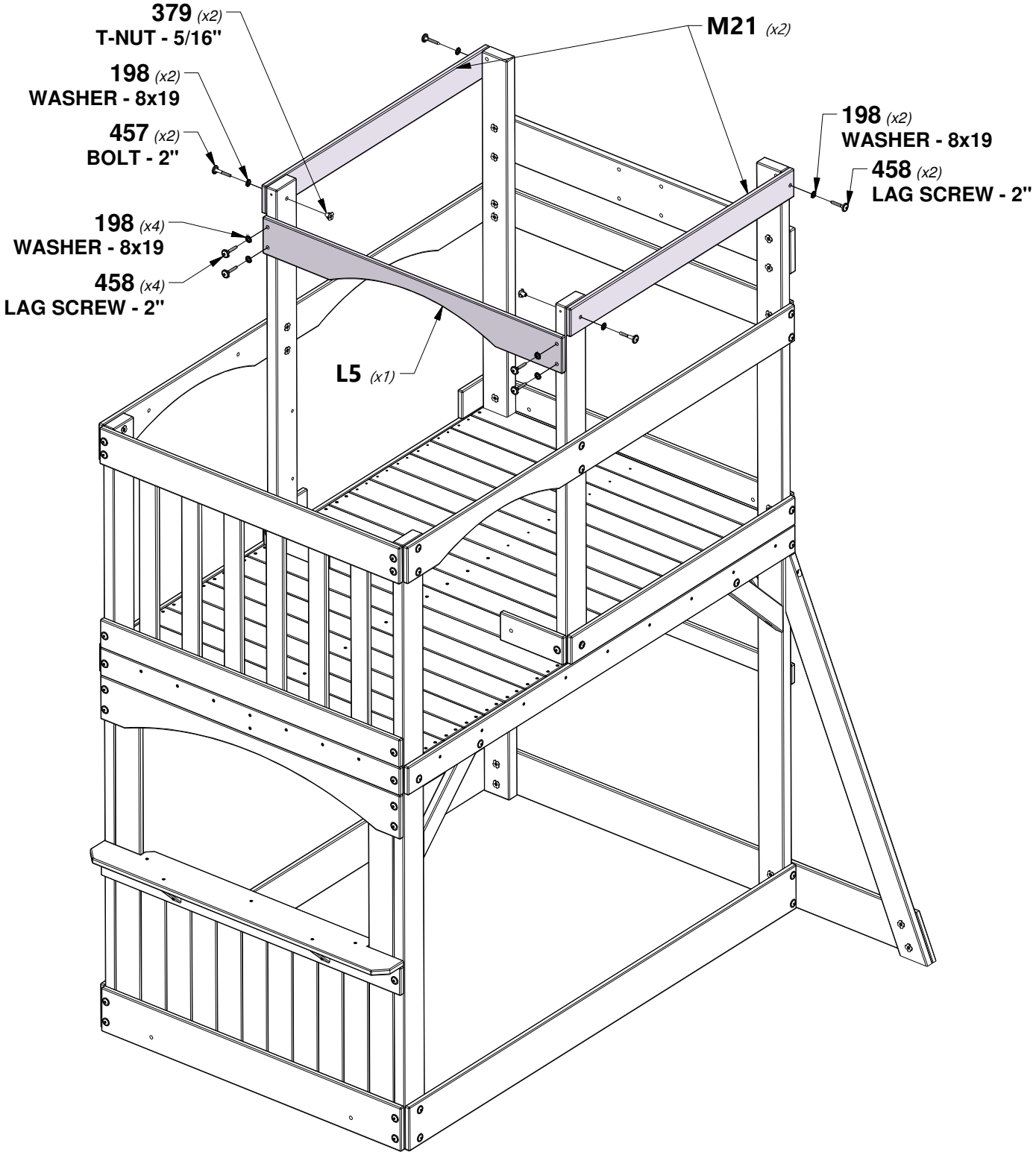

STEP 14 - FORT ASSEMBLY

M14 (x1) | **WALL BOARD - W4L14584** *5/8"x3"x36 1/2" (16x76x926)*

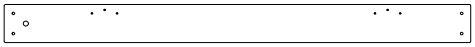

M33 (x1) | **WALL BOARD - W4L14600** *5/8"x3"x36 1/2" (16x76x926)*

Y1 (x2) | **WALL BOARD - W4L14616** *5/8"x4"x34 5/8" (16x102x880)*

A4M01046 (x2) | **L BRACKET 2.5x38x55x55**

QTY	PART NUMBER	DESCRIPTION
16	H100088	SCREW PFH 8x1-1/8"
2	H100192	NUT BARREL WH 5/16x7/8 BLK
2	H100199	WASHER LOCK EXT 12x19 BLK
2	H100379	T-NUT 5/16 BLK
2	H100396	BOLT WH 5/16x1/2 BLK
2	H100468	BOLT WH 5/16x1 BLK

TIP:
INSTALL ALL 088 WOOD SCREWS FIRST.
THEN INSTALL BRACKETS AND REMAINING HARDWARE.

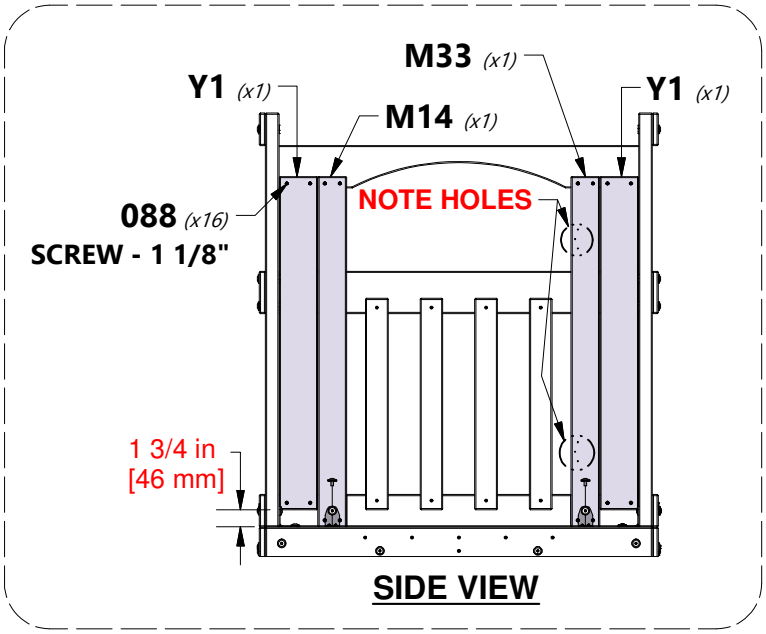

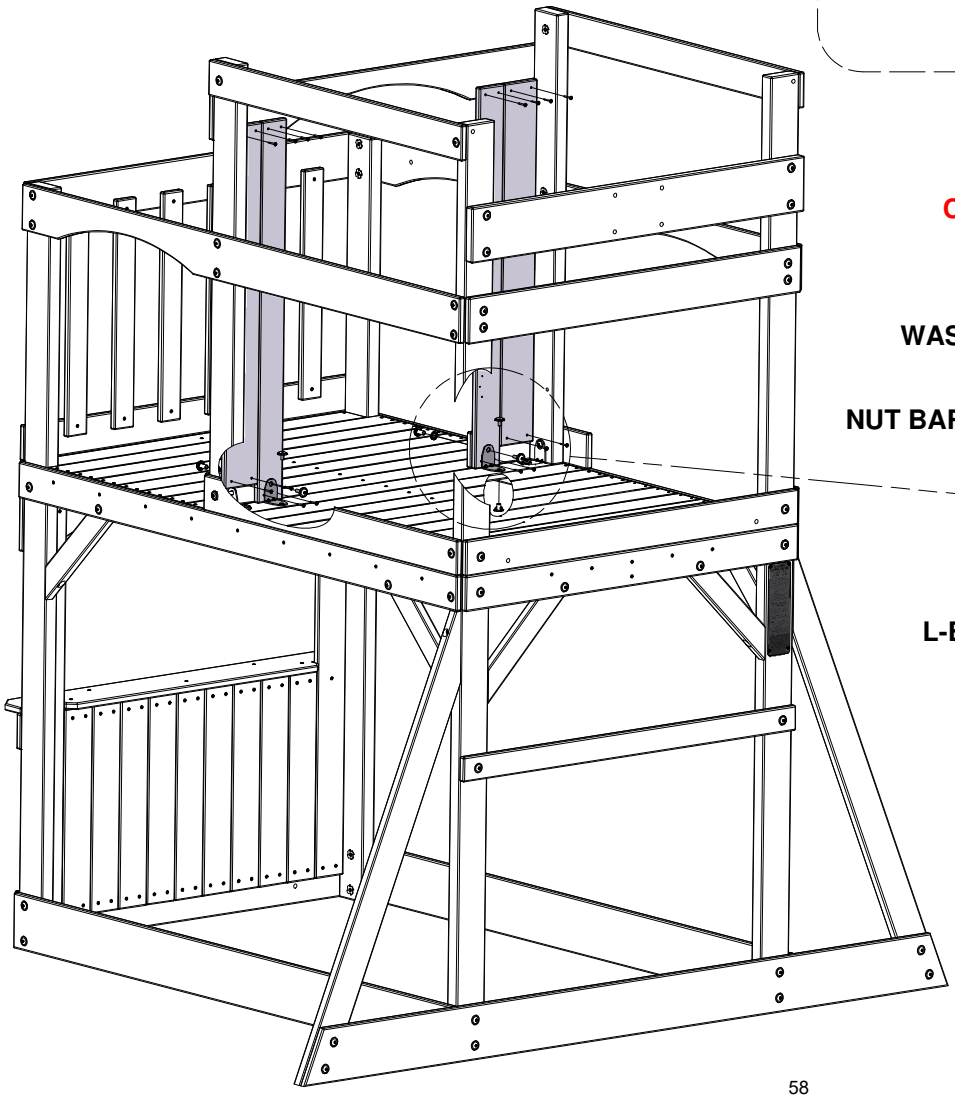

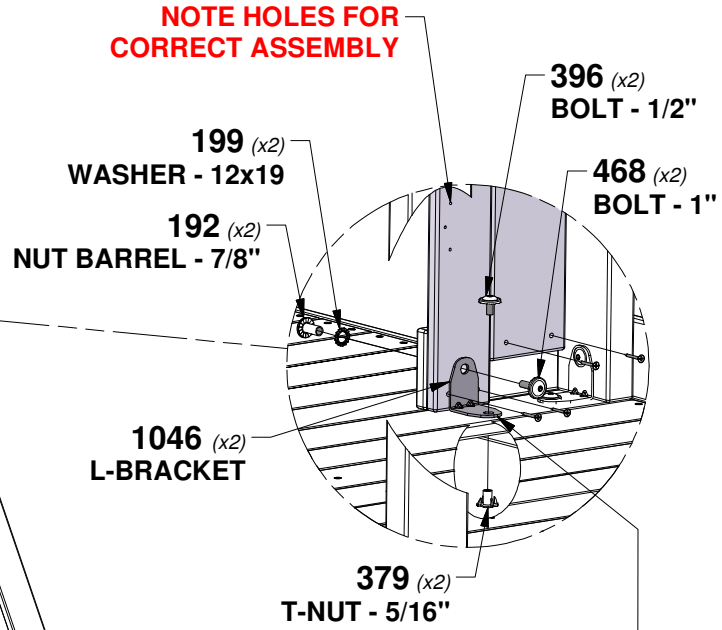

USING BRACKETS AS A GUIDE
DRILL 3/8" [10mm] HOLE THRU
FLOOR FOR HARDWARE.

STEP 15 - FORT ASSEMBLY

QTY	PART NUMBER	DESCRIPTION
36	H100088	SCREW PFH 8x1-1/8"

M19 *(x2)* | **WALL BOARD - W4L14589**
5/8"x3 3/8"x40 5/8" (16x86x1032)

M20 *(x2)* | **WALL BOARD - W4L14590**
5/8"x3 3/8"x16 1/4" (16x86x412)

M26 *(x8)* | **WALL BOARD - W4L14596**
5/8"x3 3/8"x3 1/2" (16x86x88)

K6 *(x1)* | **WALL BOARD - W4L14562**
5/8"x5 1/4"x16 1/4" (16x134x412)

NOTE EQUALLY SPACE WALL BOARDS

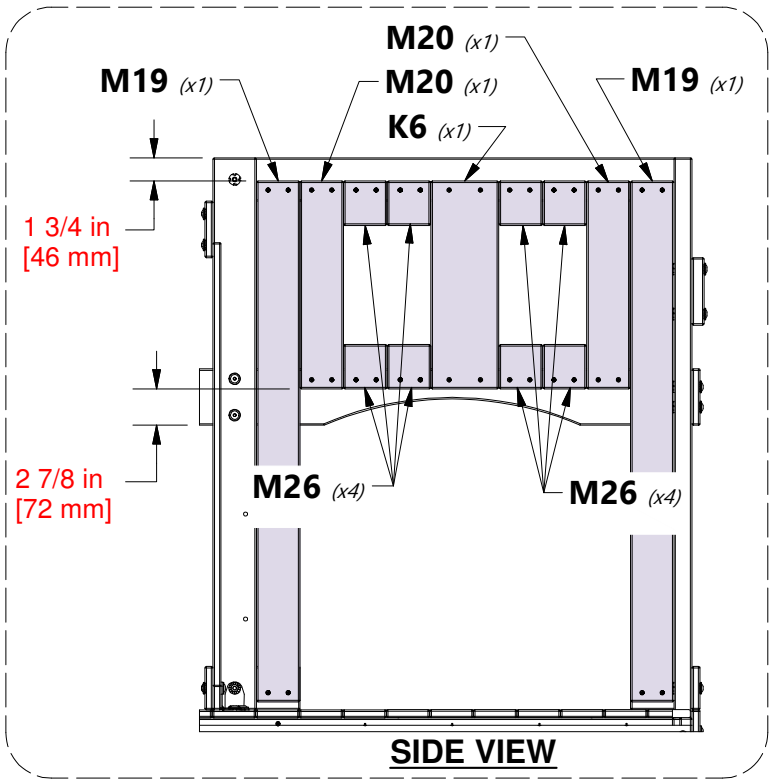

SIDE VIEW

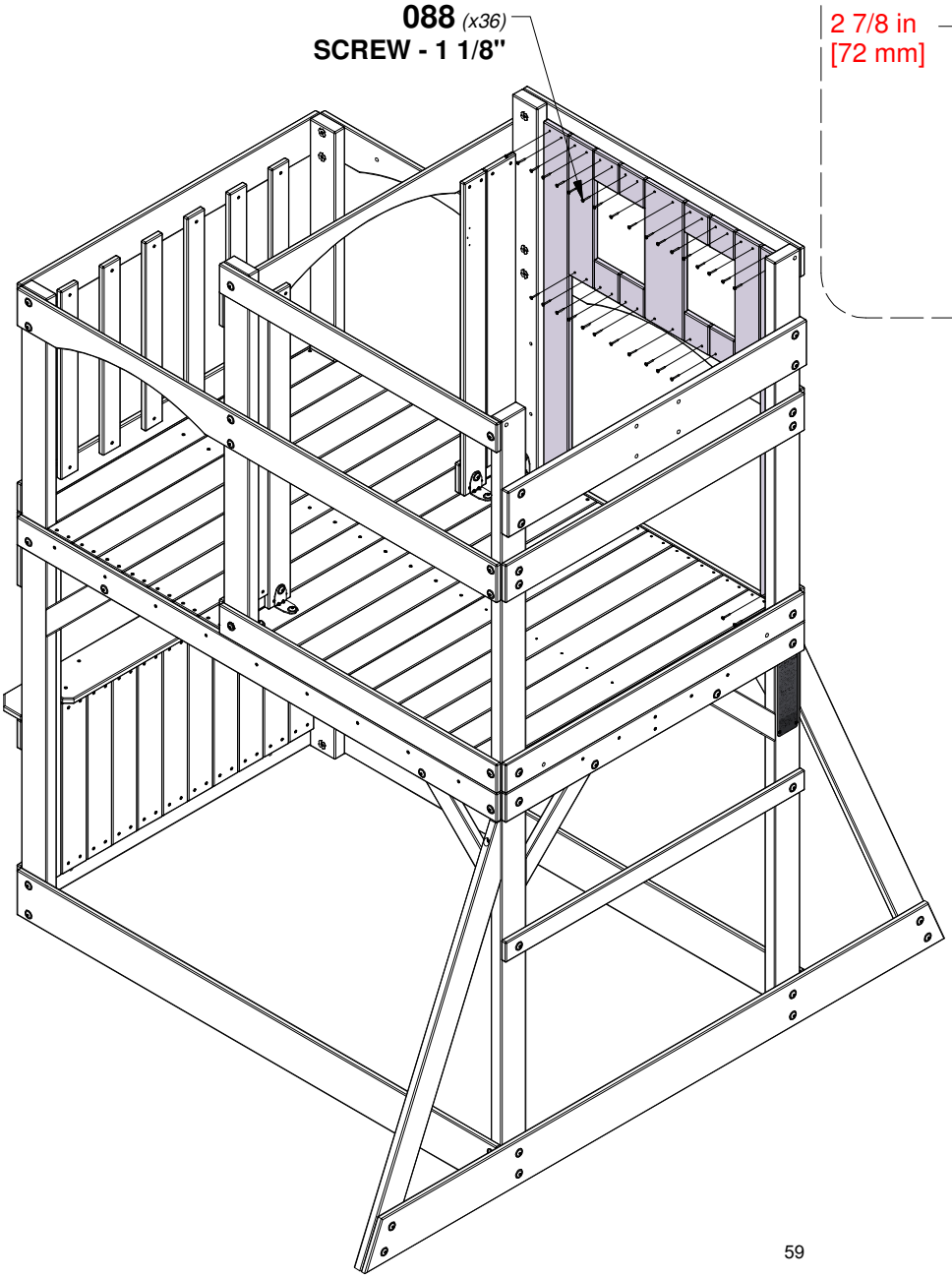

STEP 16 - FORT ASSEMBLY

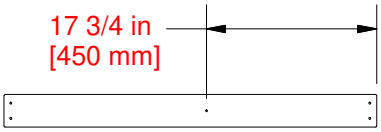

M12 *(x9)* | **WALL BOARD - W4L14582**
5/8"x3 3/8"x38 7/8" (16x86x986)

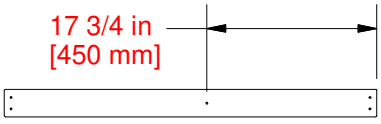

M22 *(x1)* | **WALL BOARD - W4L14592**
5/8"x2 7/8"x38 7/8" (16x73x986)

QTY	PART NUMBER	DESCRIPTION
30	H100088	SCREW PFH 8x1-1/8"

NOTE EQUALLY SPACE WALL BOARDS

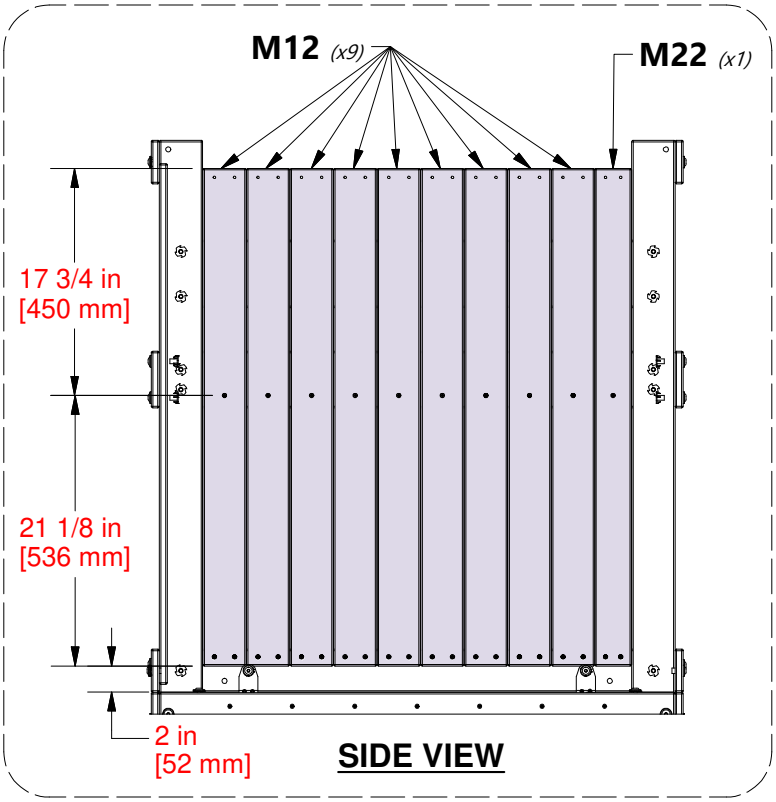

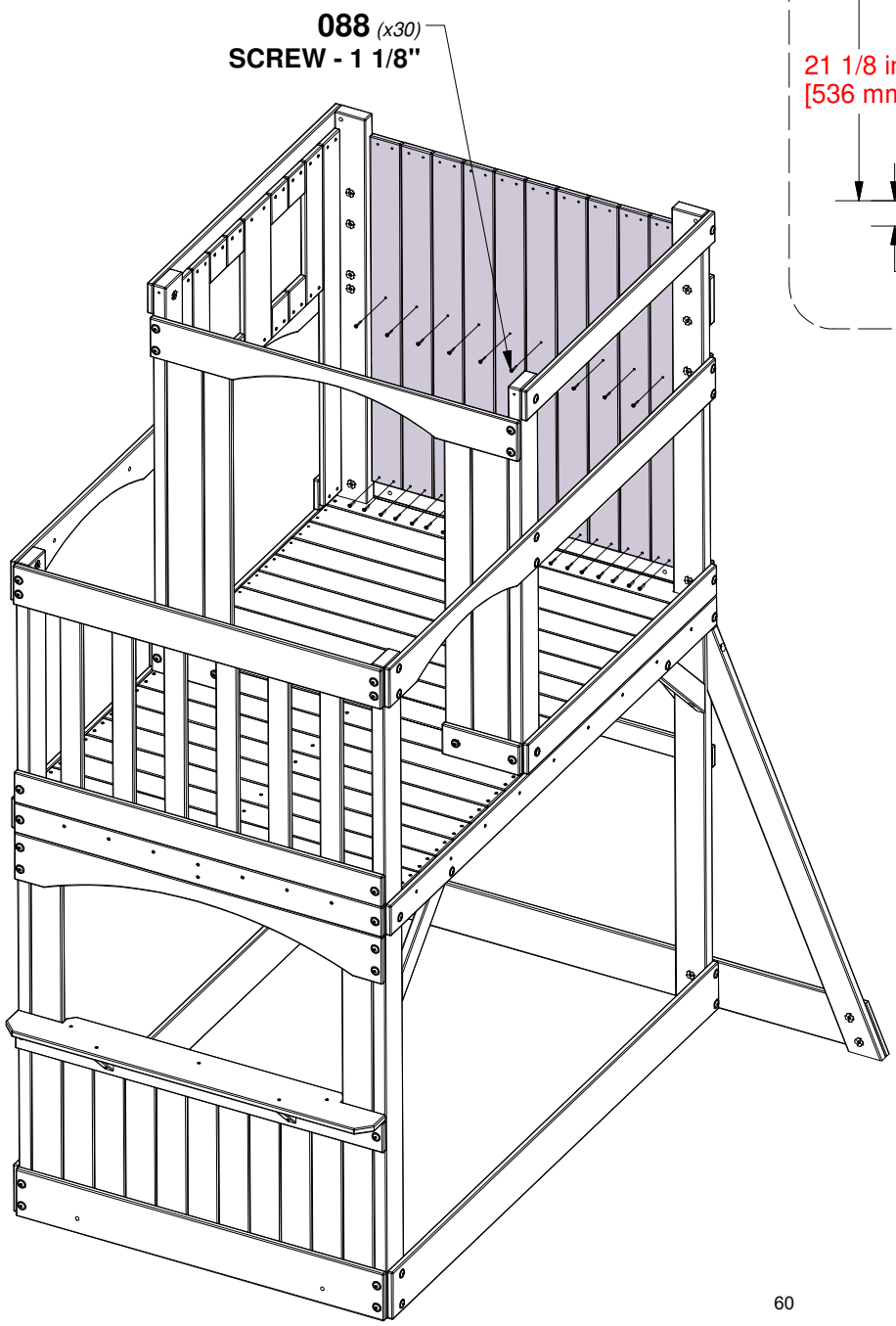

STEP 17 - FORT ASSEMBLY

QTY	PART NUMBER	DESCRIPTION
38	H100088	SCREW PFH 8x1-1/8"

N3 (x1) | **WALL BOARD - W4L14604**
5/8"x2"x22" (16x50x558)

M13 (x9) | **WALL BOARD - W4L14583**
5/8"x3 3/8"x22" (16x86x558)

NOTE EQUALLY SPACE WALL BOARDS

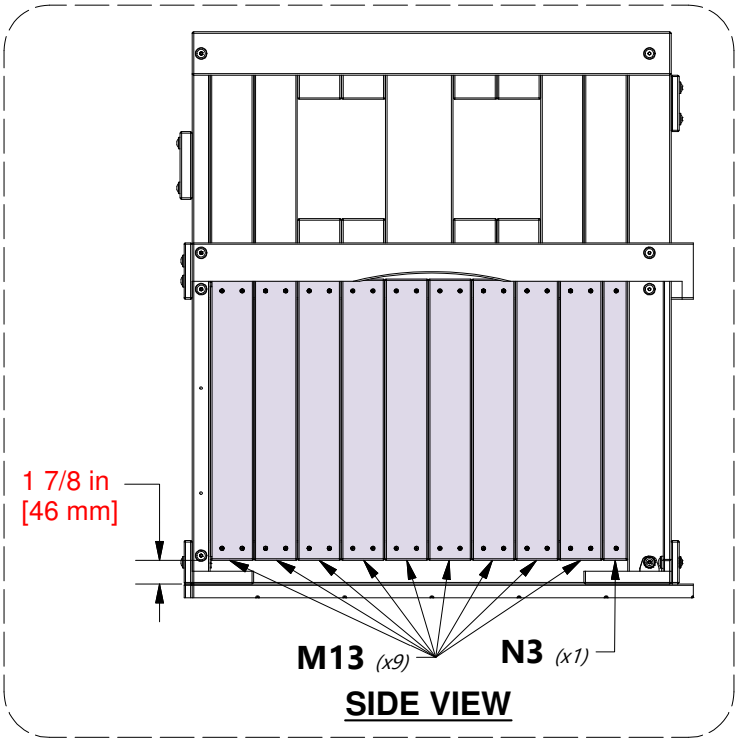

SIDE VIEW

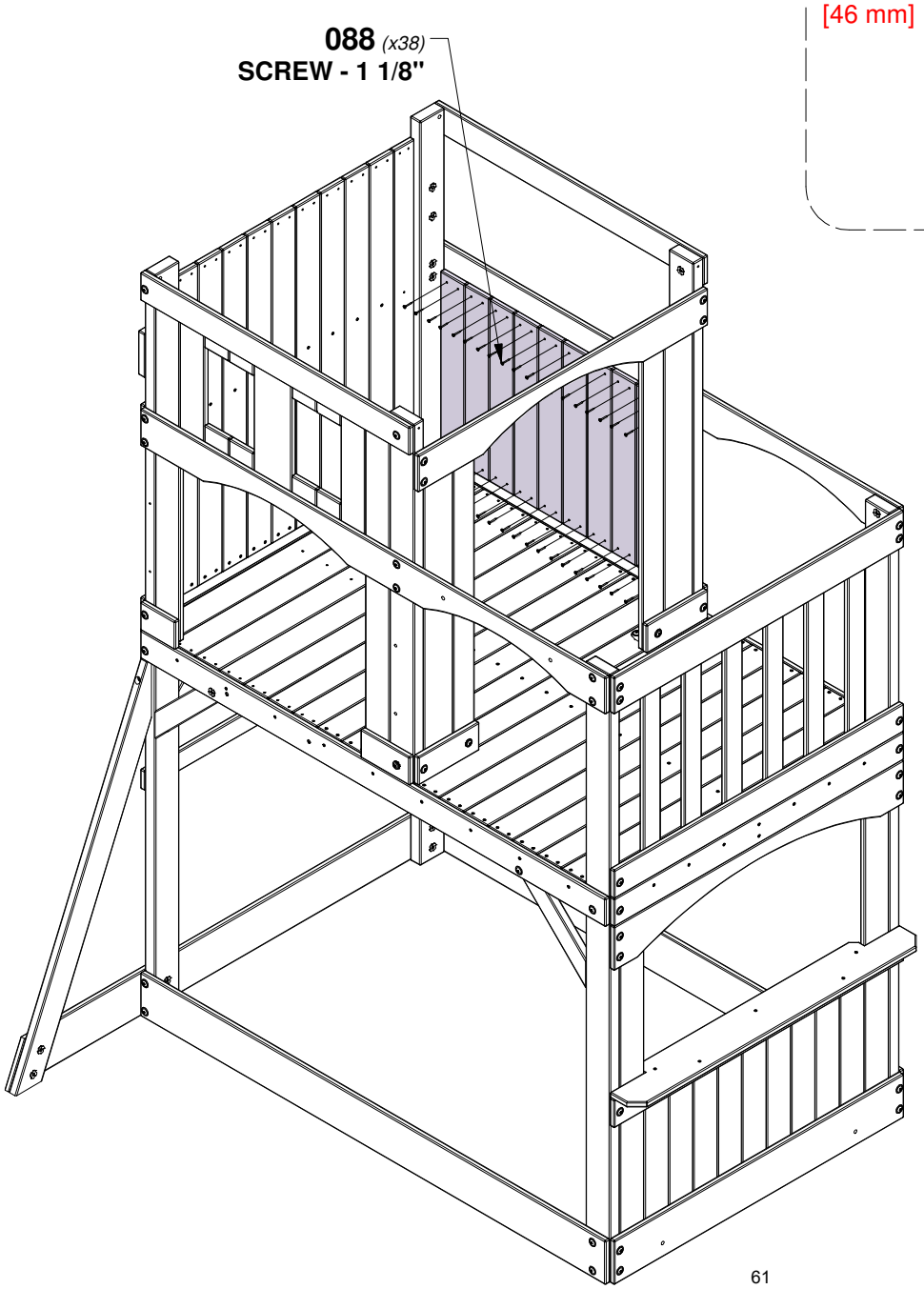

STEP 18 - FORT ASSEMBLY

QTY	PART NUMBER	DESCRIPTION
8	H100070	SCREW PWH 8x3/4

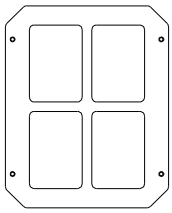

A100014 *(x2)* | **PLASTIC WINDOW WHITE**

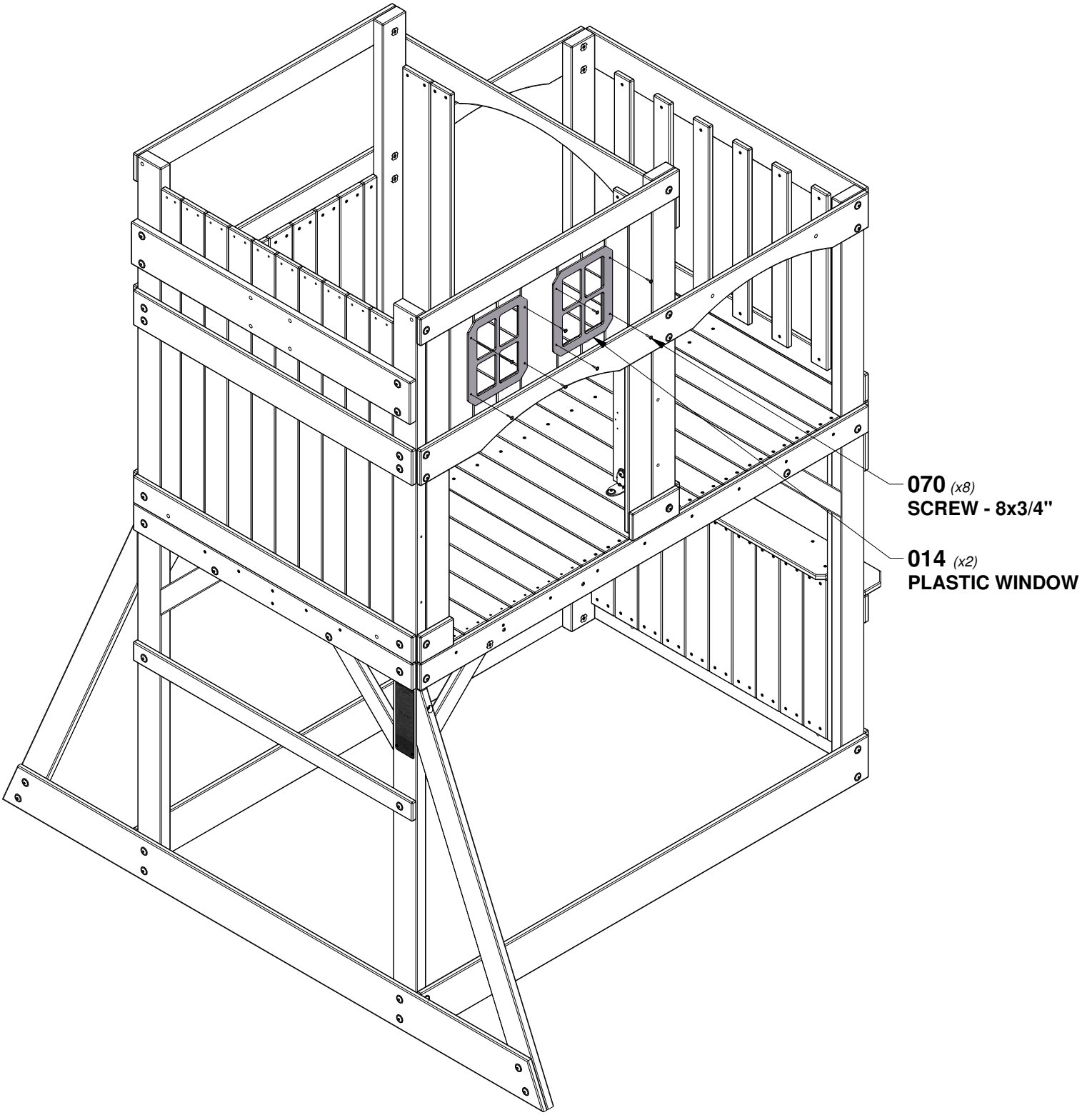

STEP 19 - FORT ASSEMBLY

QTY	PART NUMBER	DESCRIPTION
4	H100088	SCREW PFH 8x1-1/8"

O2 *(x2)* **WALL BOARD - W4L14610**
5/8"x1 3/8"x15 1/2" (16x34x395)

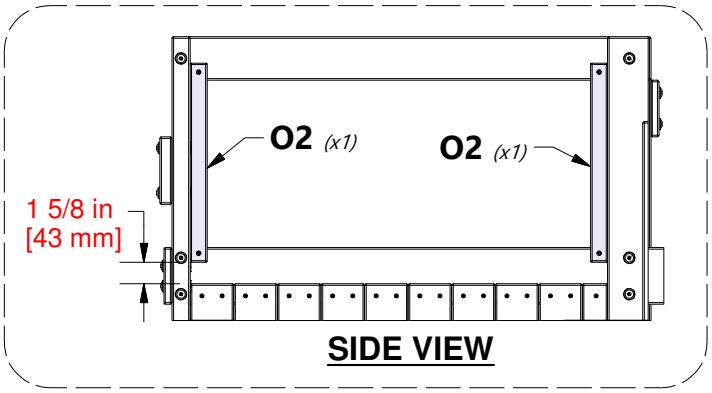

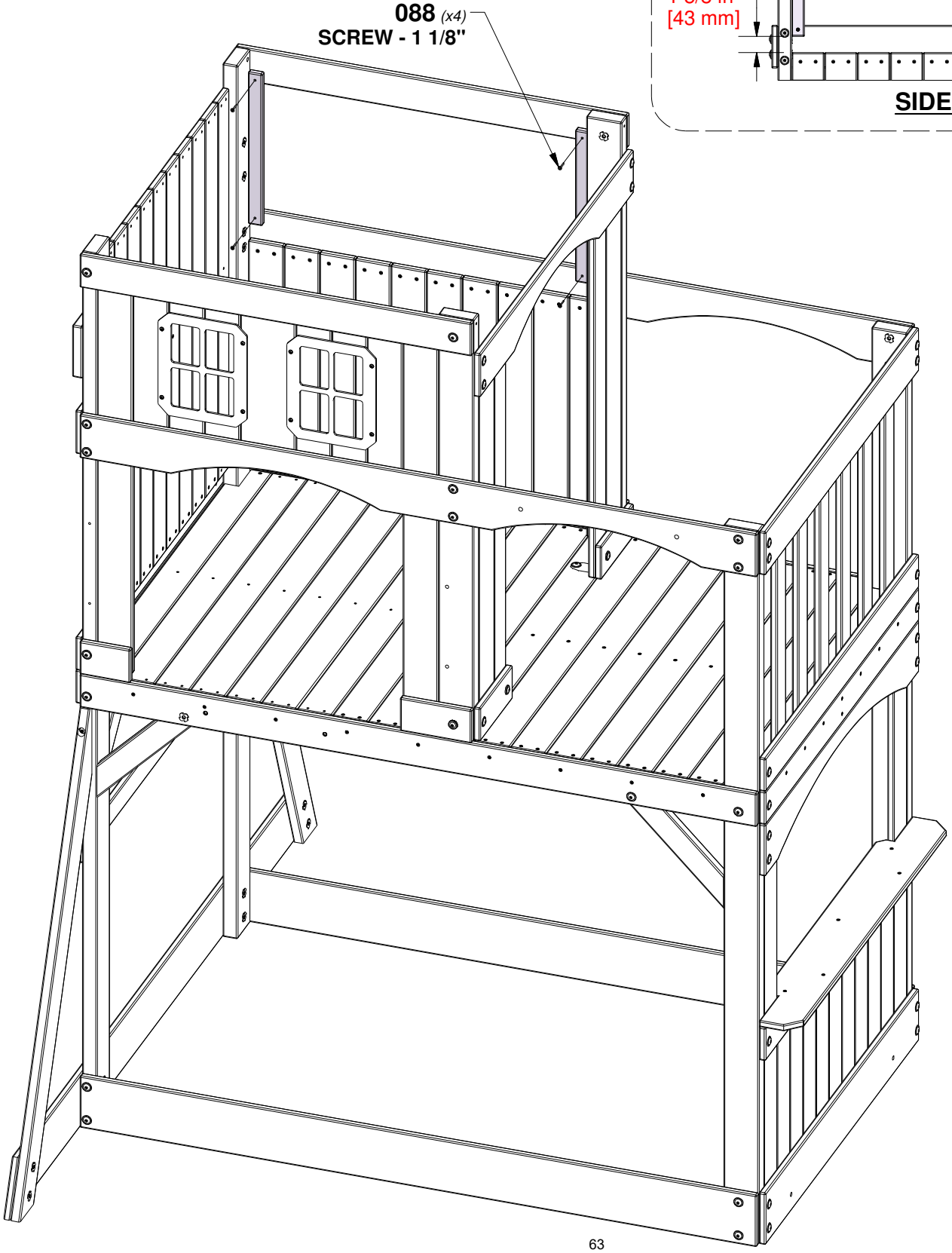

STEP 20 - FORT ASSEMBLY

QTY	PART NUMBER	DESCRIPTION
6	H100111	SCREW PFH 8x2

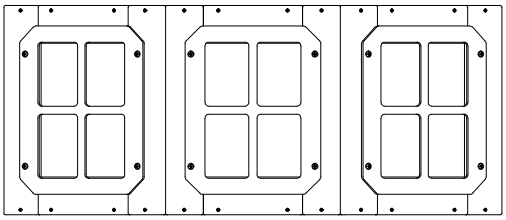

(x1) **MONTPELIER BAY WINDOW**

BAY WINDOW *(x1)*

111 *(x6)*
SCREW - 2"

PRE-DRILL USING AN 1/8" [3mm] DRILL BIT FOR HARDWARE.

STEP 21 - FORT ASSEMBLY

QTY	PART NUMBER	DESCRIPTION
4	H100088	SCREW PFH 8x1-1/8"
6	H100624	SCREW PFH 6x5/8 BLK

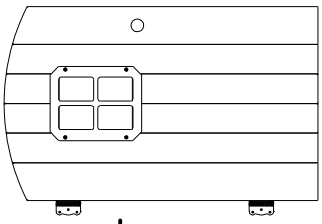

(x1) **DOOR ASSEMBLY**

N9 *(x1)* **DOOR STOP - W4L14608**
5/8"x2 3/8"x8 3/4" (16x60x222)

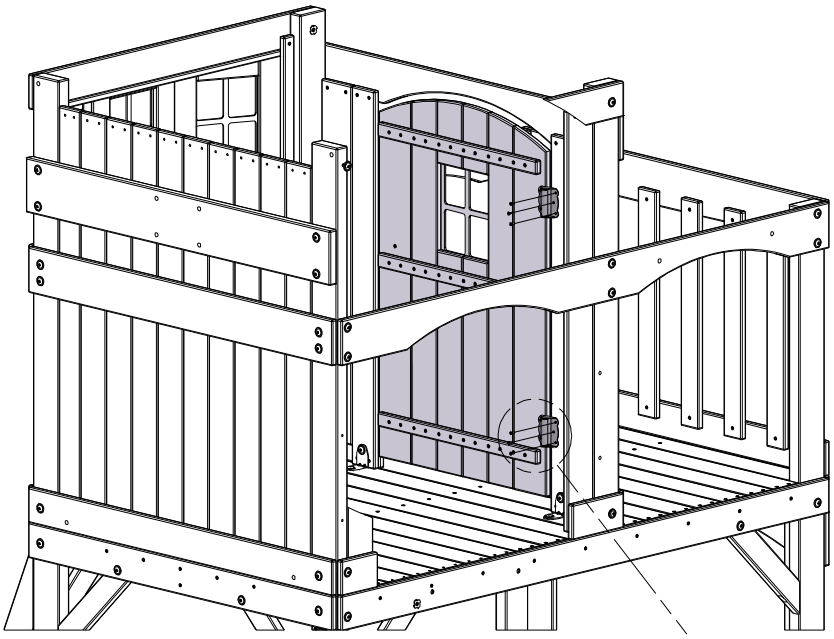

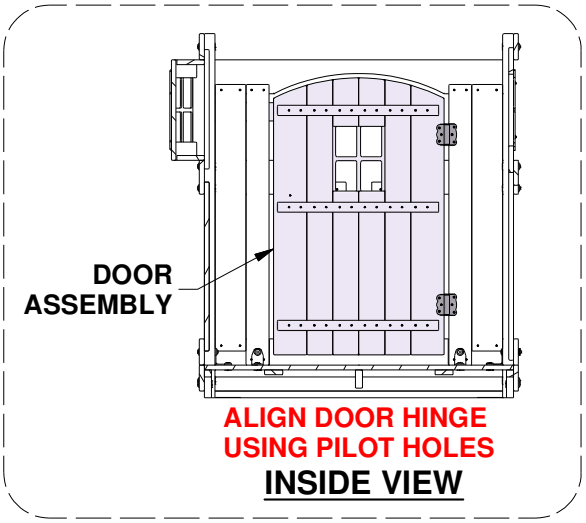

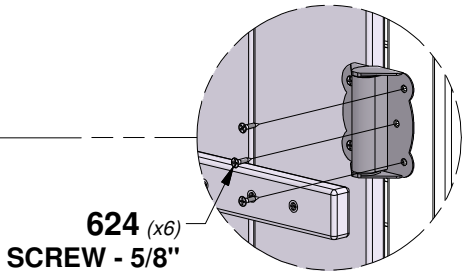

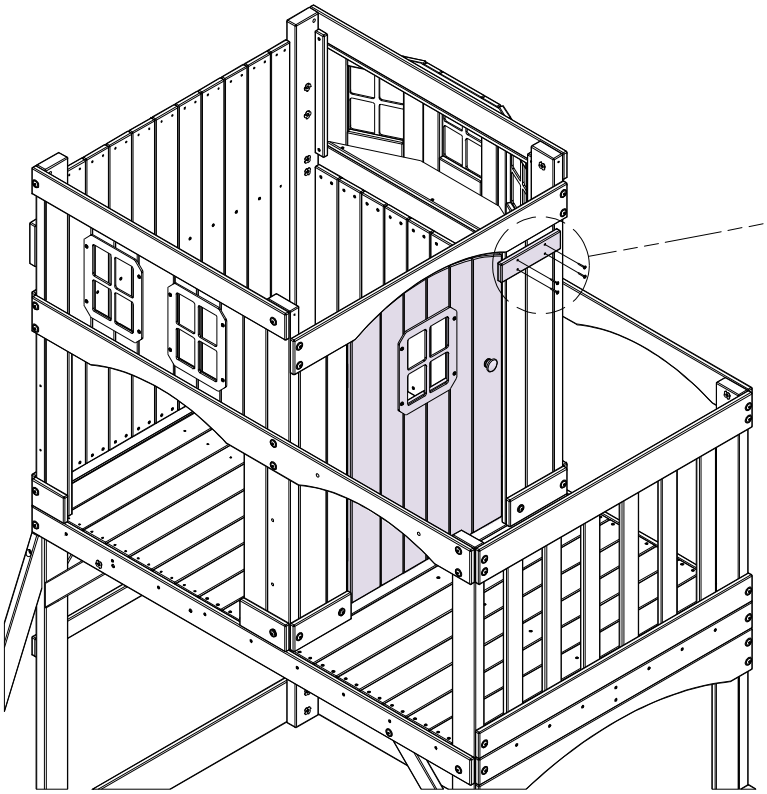

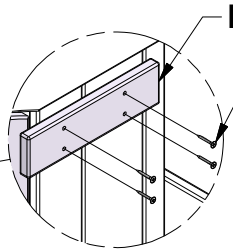

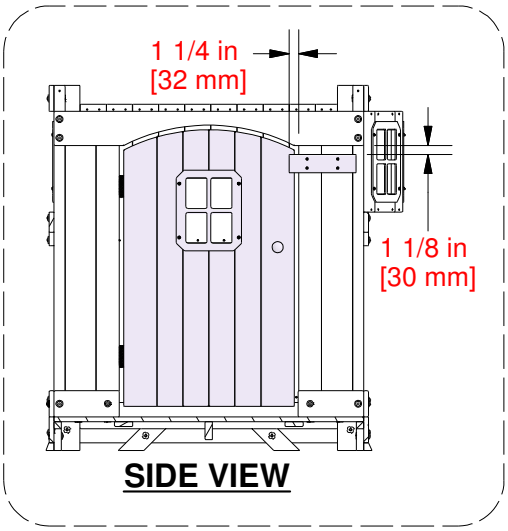

STEP 22 - FORT ASSEMBLY

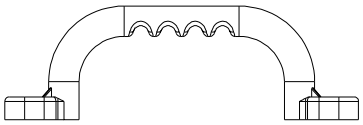

A100028 *(x2)* | **HAND GRIP GREEN PLASTIC**

QTY	PART NUMBER	DESCRIPTION
2	H100398	T-NUT 1/4 BLK
2	H100403	LAG SCREW WH 1/4x1-1/2 BLK
4	H100405	WASHER LOCK EXT 6x15 BLK
2	H101026	BOLT WH 1/4x1-3/4 BLK

TIP:
INSTALL T-NUTS IN WOOD FIRST

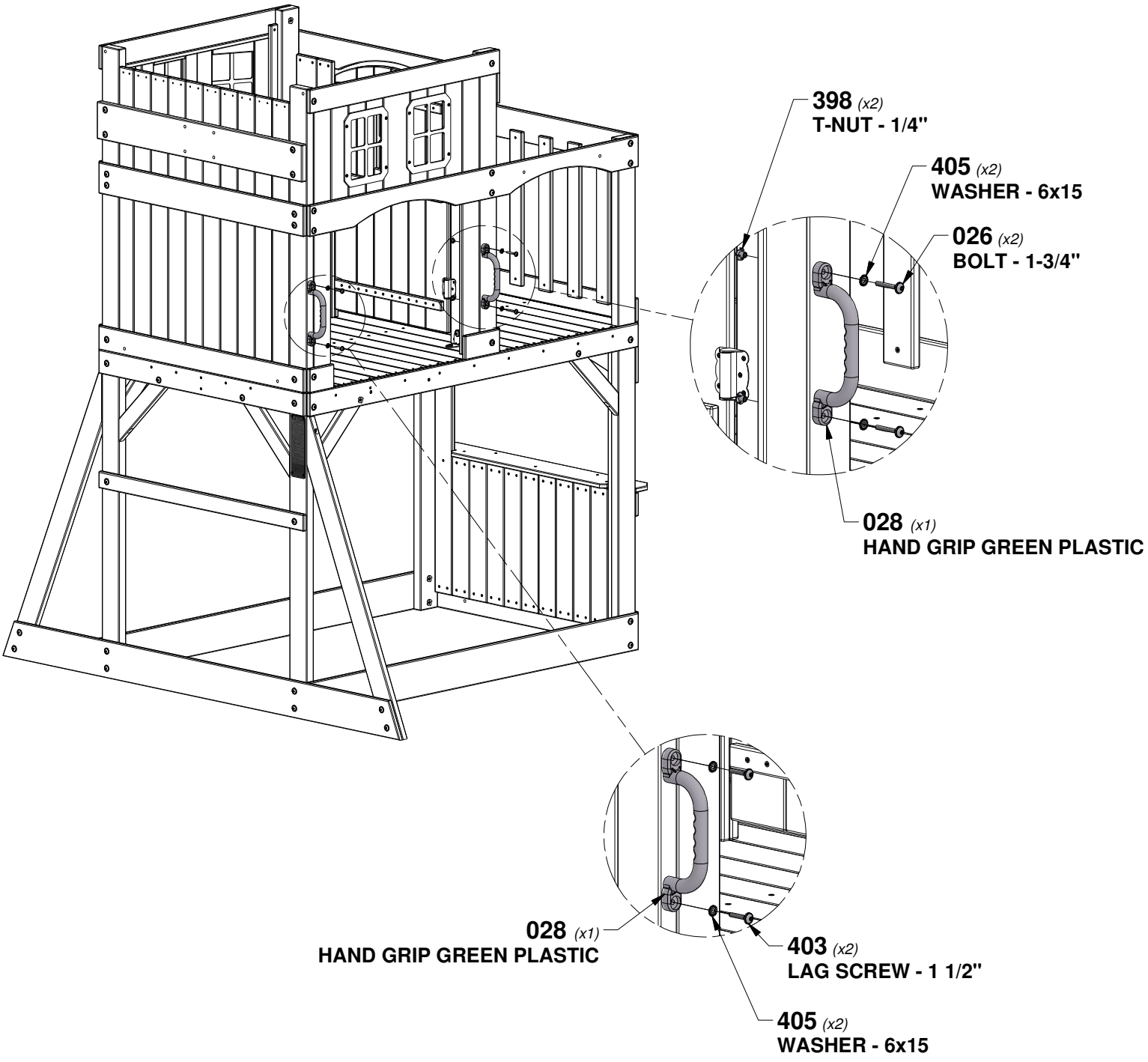

STEP 23 - FORT ASSEMBLY

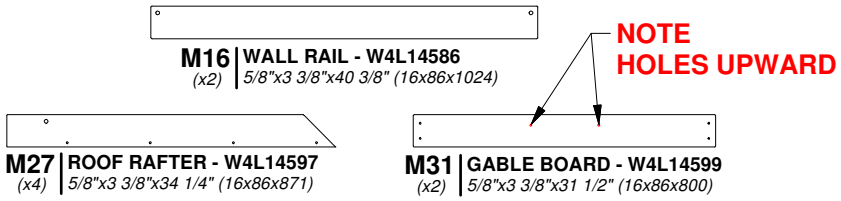

M16 (x2) | **WALL RAIL - W4L14586**
5/8"x3 3/8"x40 3/8" (16x86x1024)

M27 (x4) | **ROOF RAFTER - W4L14597**
5/8"x3 3/8"x34 1/4" (16x86x871)

M31 (x2) | **GABLE BOARD - W4L14599**
5/8"x3 3/8"x31 1/2" (16x86x800)

QTY	PART NUMBER	DESCRIPTION
28	H100088	SCREW PFH 8x1-1/8"
2	H100194	BOLT WH 5/16x2-1/2 BLK
4	H100198	WASHER LOCK EXT 8x19 BLK
2	H100379	T-NUT 5/16 BLK
2	H100458	LAG SCREW WH 5/16x2 BLK

TIP:
INSTALL T-NUTS IN WOOD FIRST

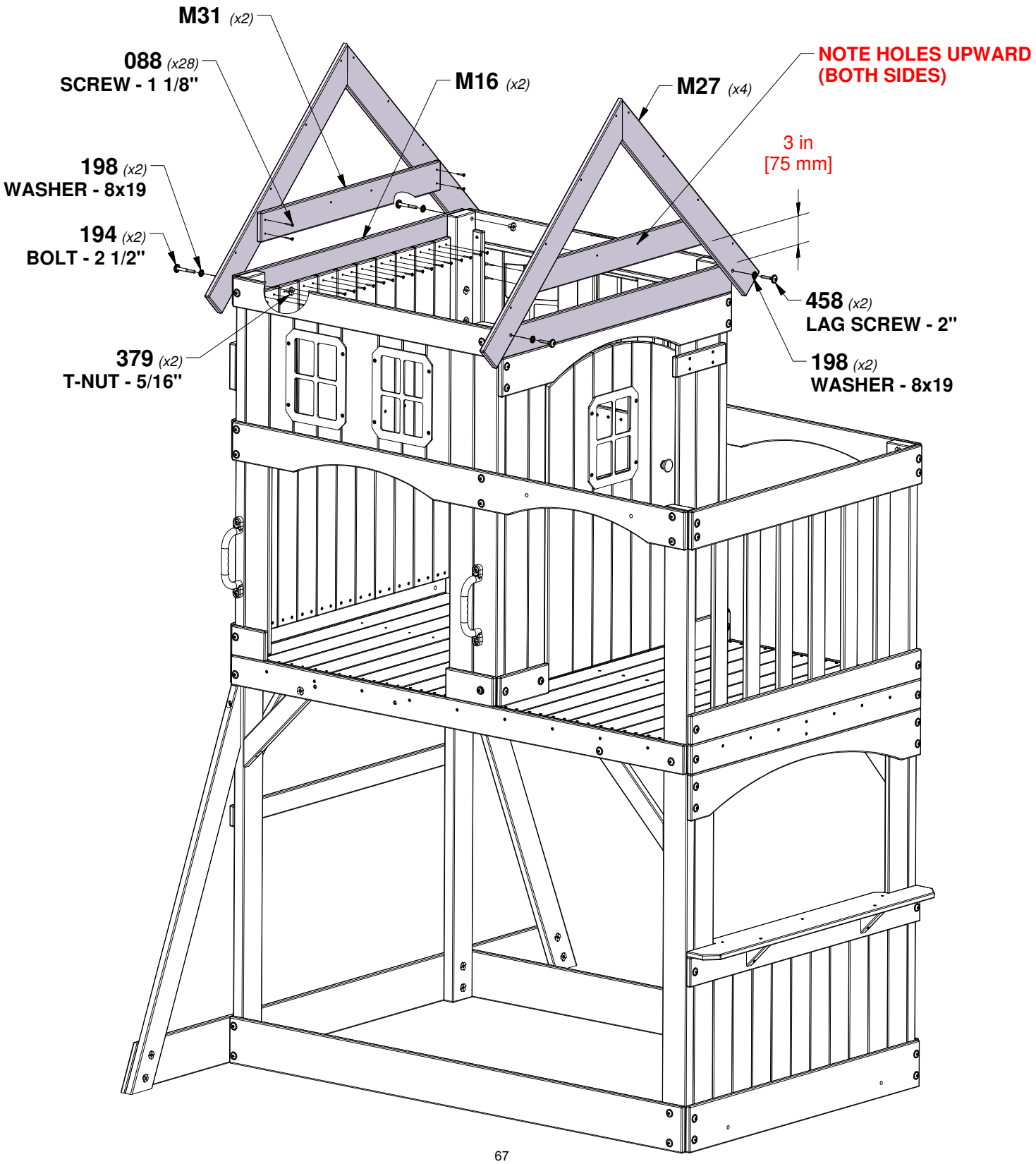

STEP 24 - FORT ASSEMBLY

QTY	PART NUMBER	DESCRIPTION
8	H100070	SCREW PWH 8x3/4
4	H100088	SCREW PFH 8x1-1/8"

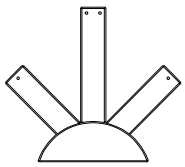

A100361 *(x2)* | **PLASTIC SUNBURST**

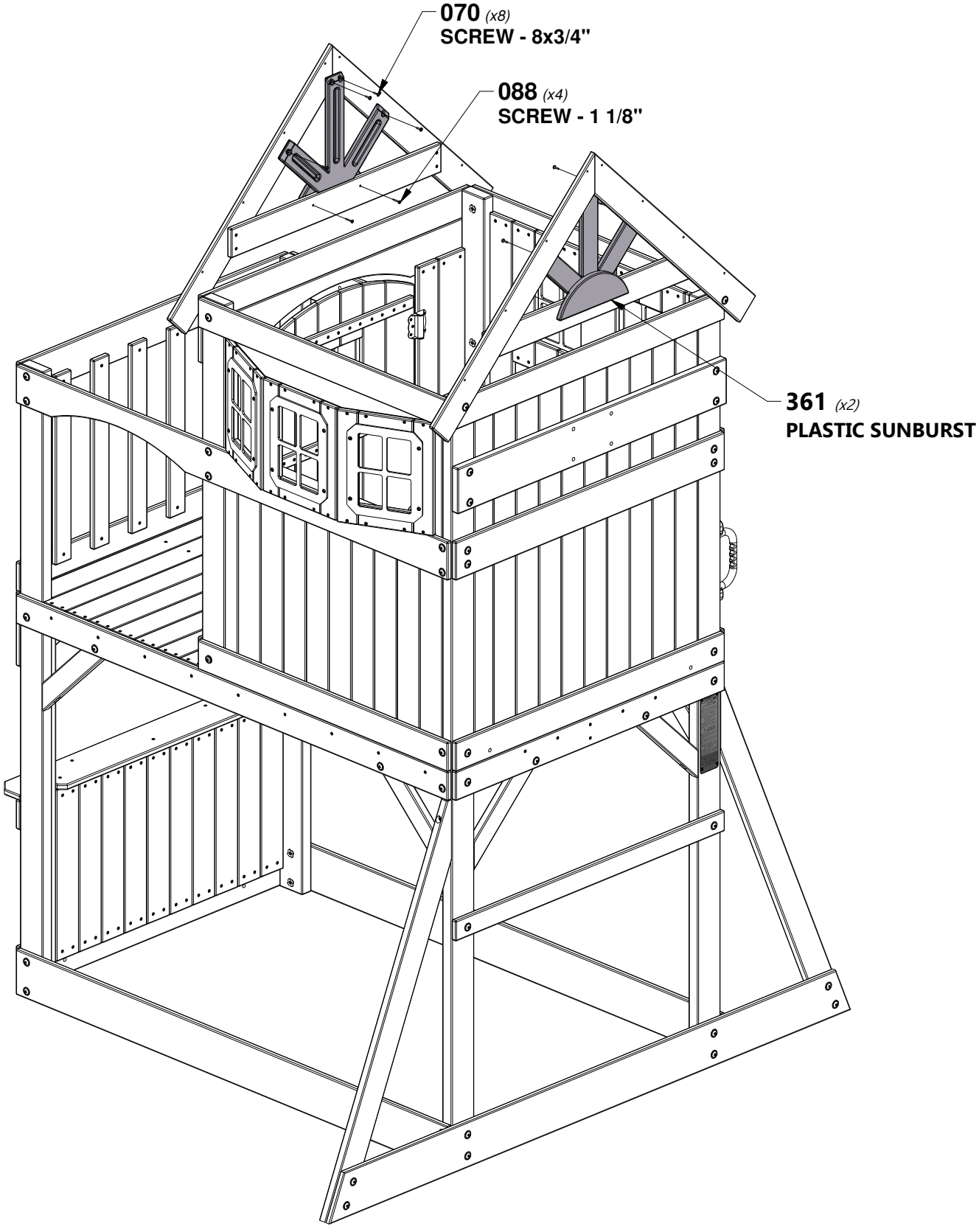

STEP 25 - FORT ASSEMBLY

QTY	PART NUMBER	DESCRIPTION
8	H100086	SCREW PFH 8x1-1/2"

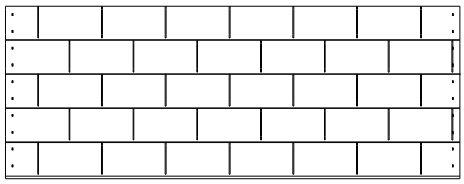

RP2 (x2) | **ROOF PANEL - W2A03134**
1 1/16"x16 1/8"x42 5/8" (35x410x1083)

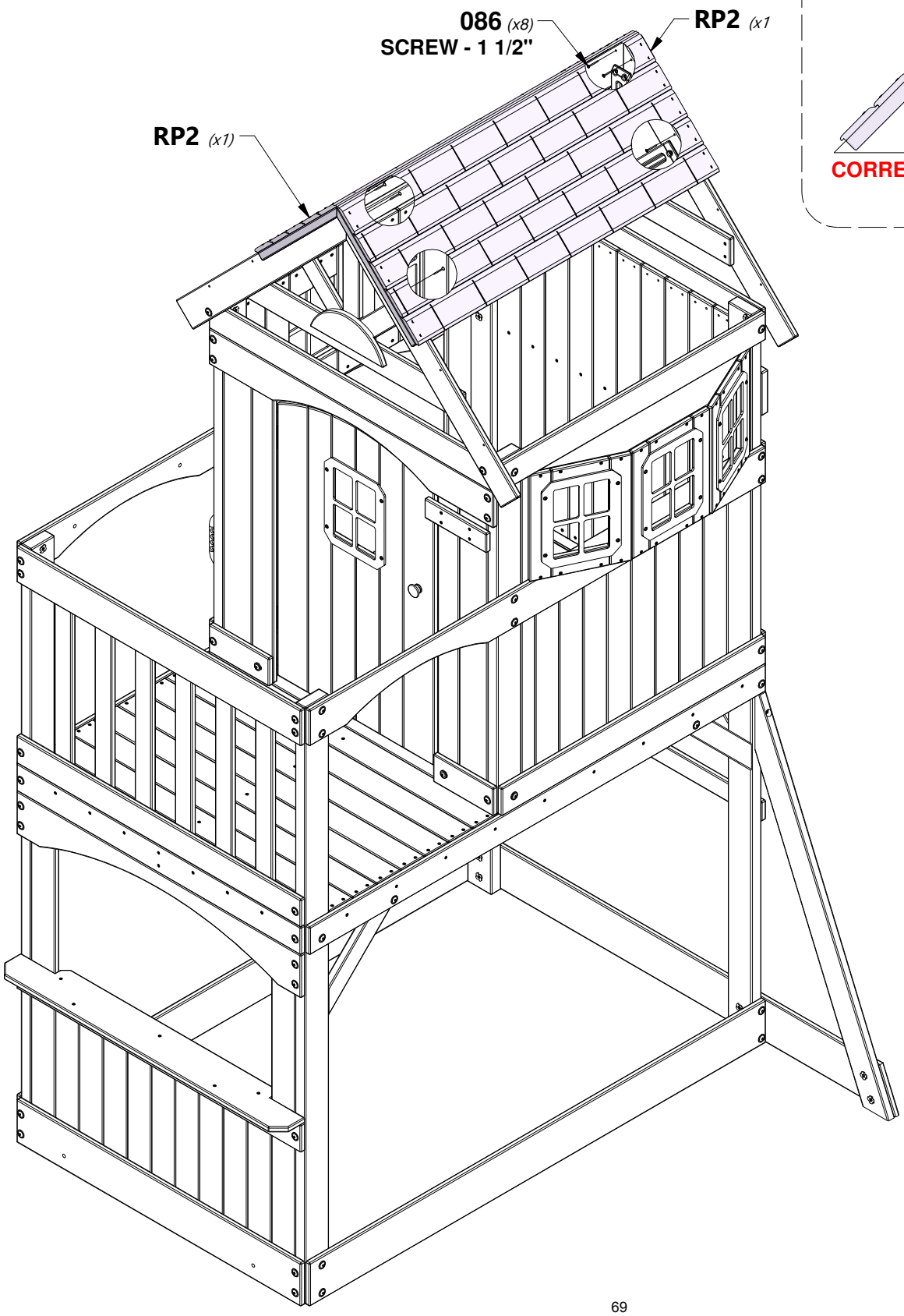

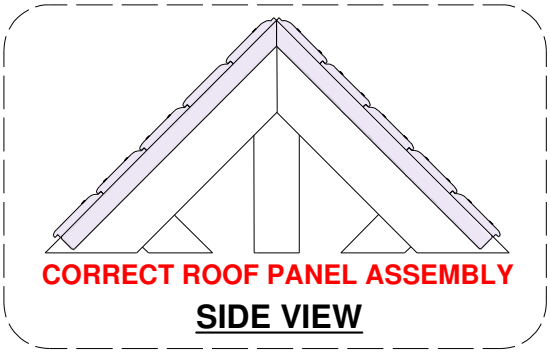

STEP 26 - FORT ASSEMBLY

QTY	PART NUMBER	DESCRIPTION
8	H100086	SCREW PFH 8x1-1/2"

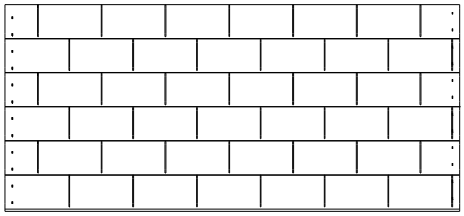

RP1 *(x2)* **ROOF PANEL - W2A03133**
1 1/16"x19 5/16"x42 5/8" (35x491x1083)

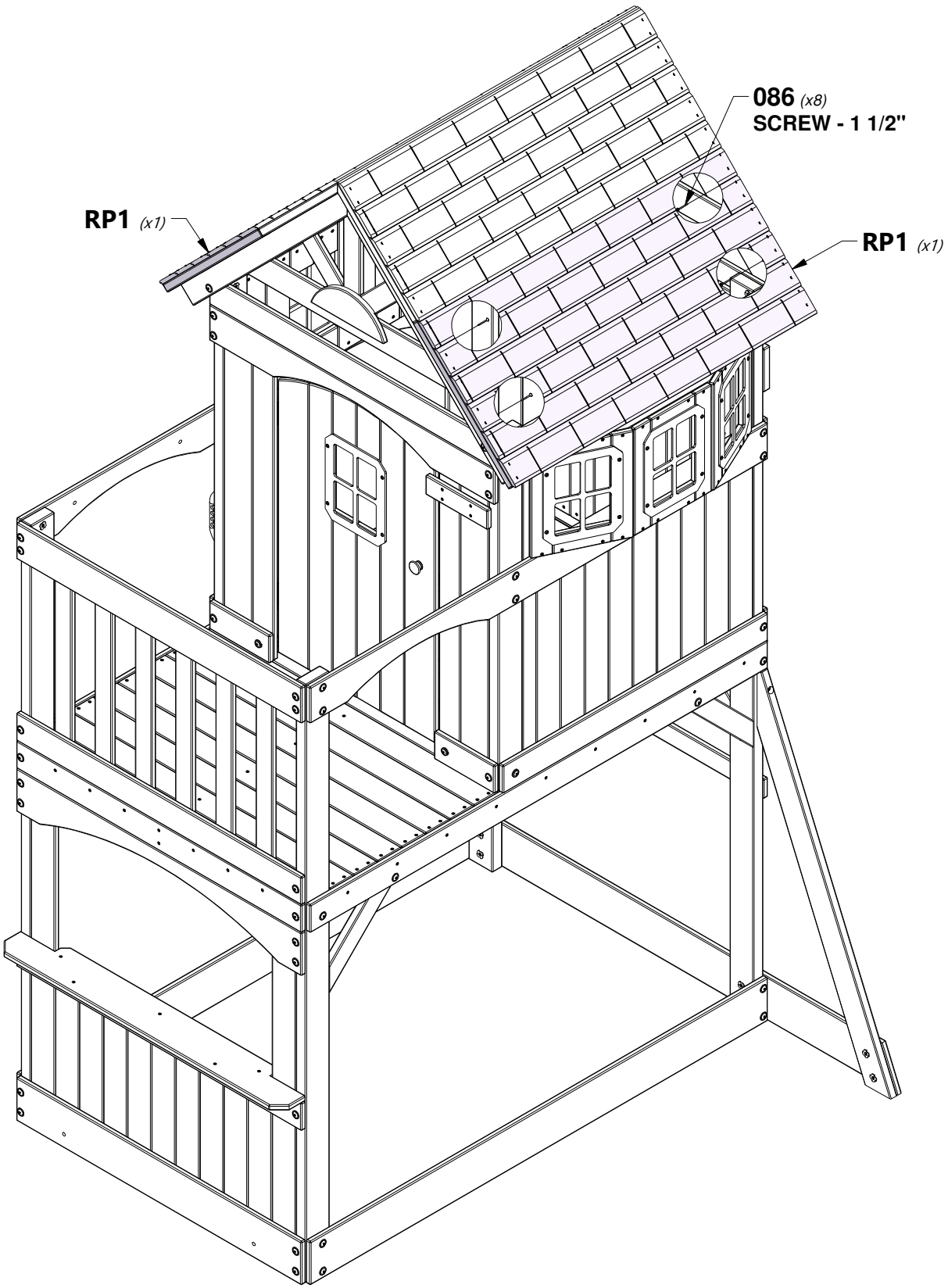

STEP 27 - FORT ASSEMBLY

QTY	PART NUMBER	DESCRIPTION
2	H100379	T-NUT 5/16 BLK
2	H100396	BOLT WH 5/16x1/2 BLK

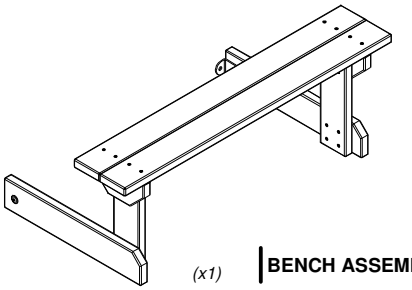

(x1) **BENCH ASSEMBLY**

TIP:
INSTALL T-NUTS IN WOOD FIRST

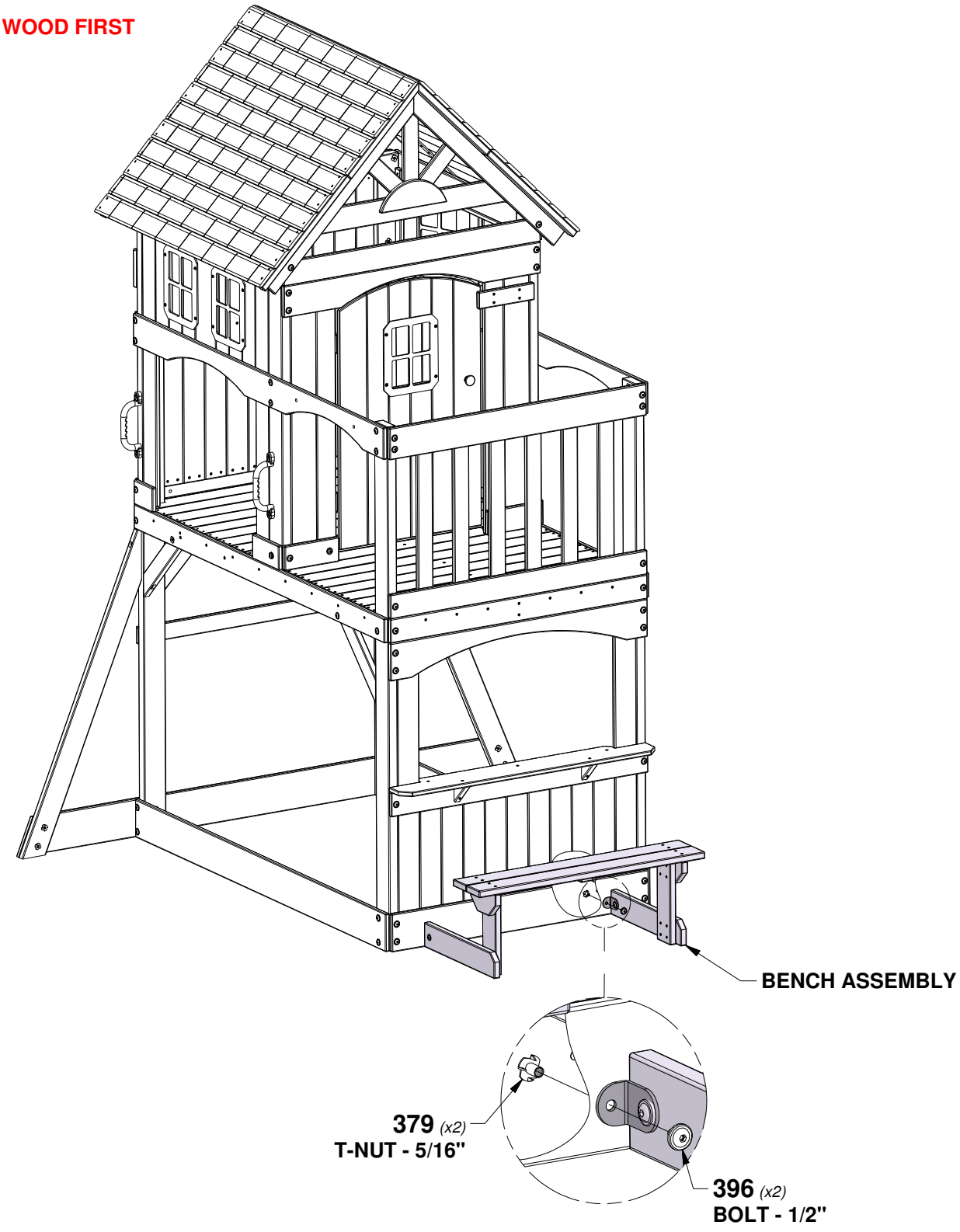

STEP 28 - FORT ASSEMBLY

G2 | **WALL RAIL - W4L14611**
(x2) | *1"x4 3/8"x40 3/4" (24x112x1034)*

M34 | **FILLER BOARD - W4L14617**
(x1) | *5/8"x1 3/4"x33 1/2" (16x45x851)*

QTY	PART NUMBER	DESCRIPTION
2	H100089	SCREW PFH 8x1-3/4"
2	H100198	WASHER LOCK EXT 8x19 BLK
2	H100205	BOLT WH 5/16x2-1/4 BLK
2	H100379	T-NUT 5/16 BLK

TIP:
INSTALL T-NUTS IN WOOD FIRST

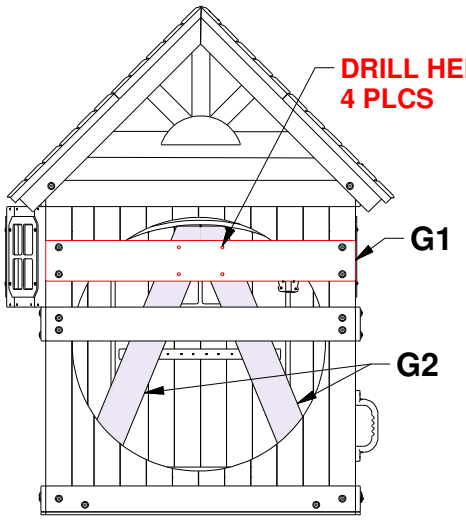

AFTER ASSEMBLY OF 'G2' BOARDS, USE THE HOLES IN THE 'G1' BOARD AS A TEMPLATE TO DRILL THROUGH THE REMAINING WALL BOARDS USING A 3/8" [10 mm] DRILL BIT.

SIDE VIEW

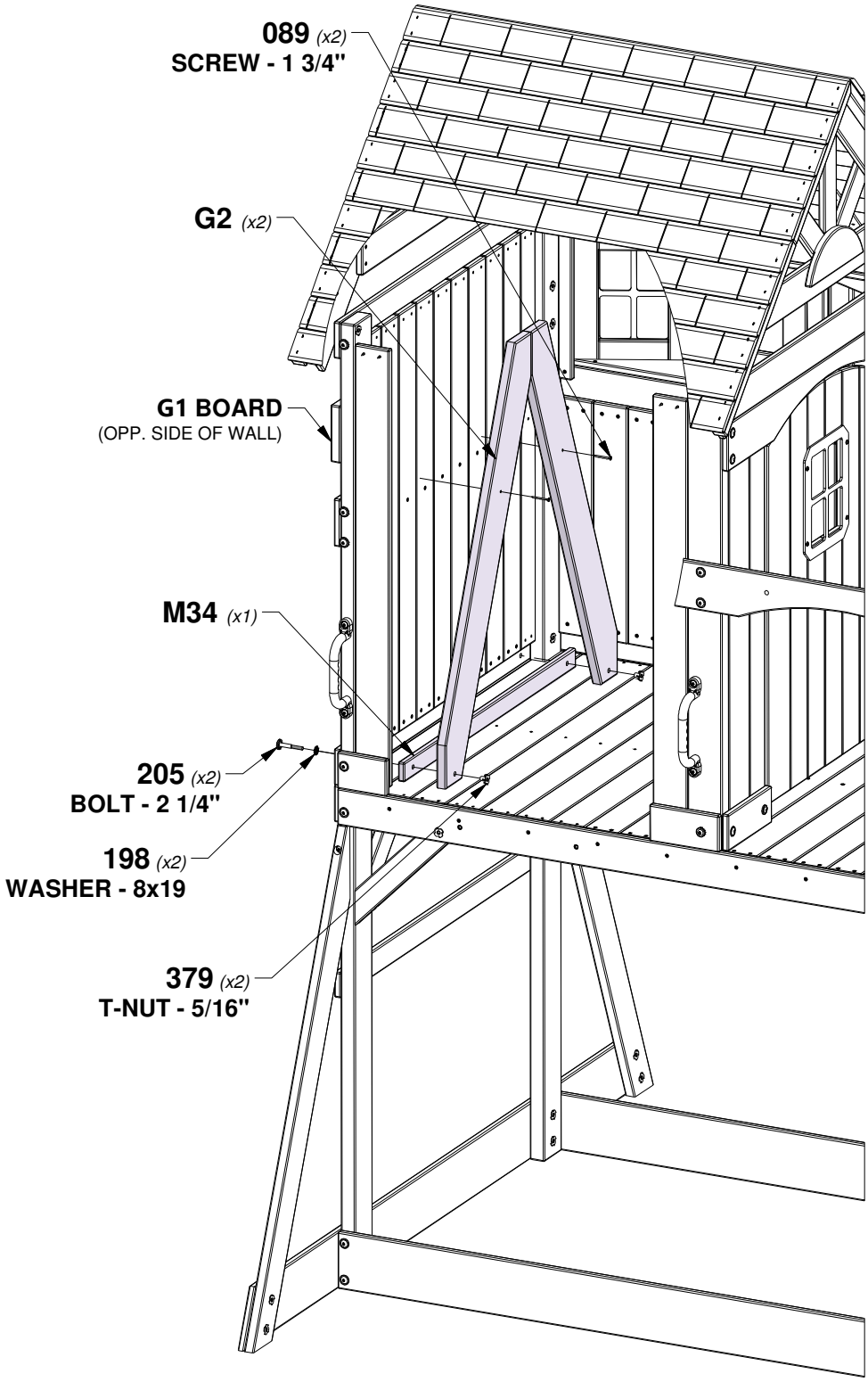

STEP 29 - FORT ASSEMBLY

QTY	PART NUMBER	DESCRIPTION
2	H100198	WASHER LOCK EXT 8x19 BLK
2	H100407	BOLT WH 5/16x1 1/2 BLK

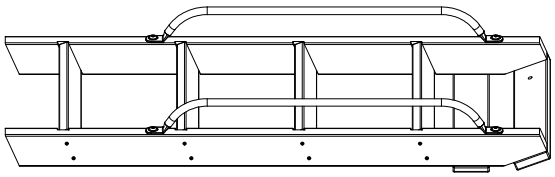

(x1) **LADDER ASSEMBLY**

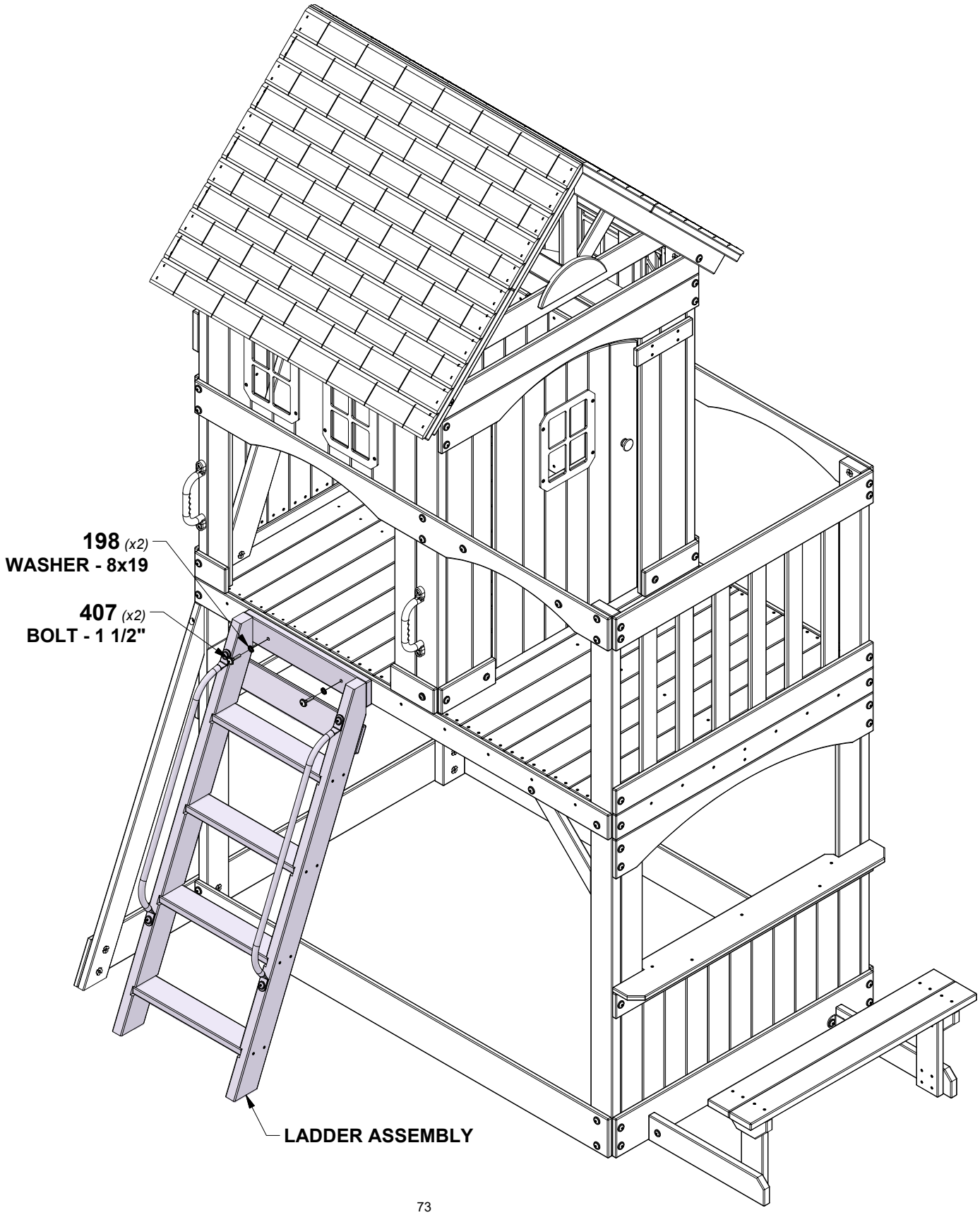

STEP 30 - FORT ASSEMBLY

QTY	PART NUMBER	DESCRIPTION
2	H100379	T-NUT 5/16 BLK
2	H100396	BOLT WH 5/16x1/2 BLK

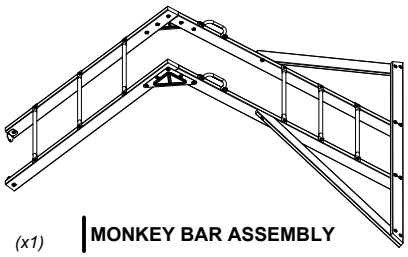

(x1) **MONKEY BAR ASSEMBLY**

TIP:
INSTALL T-NUTS IN WOOD FIRST

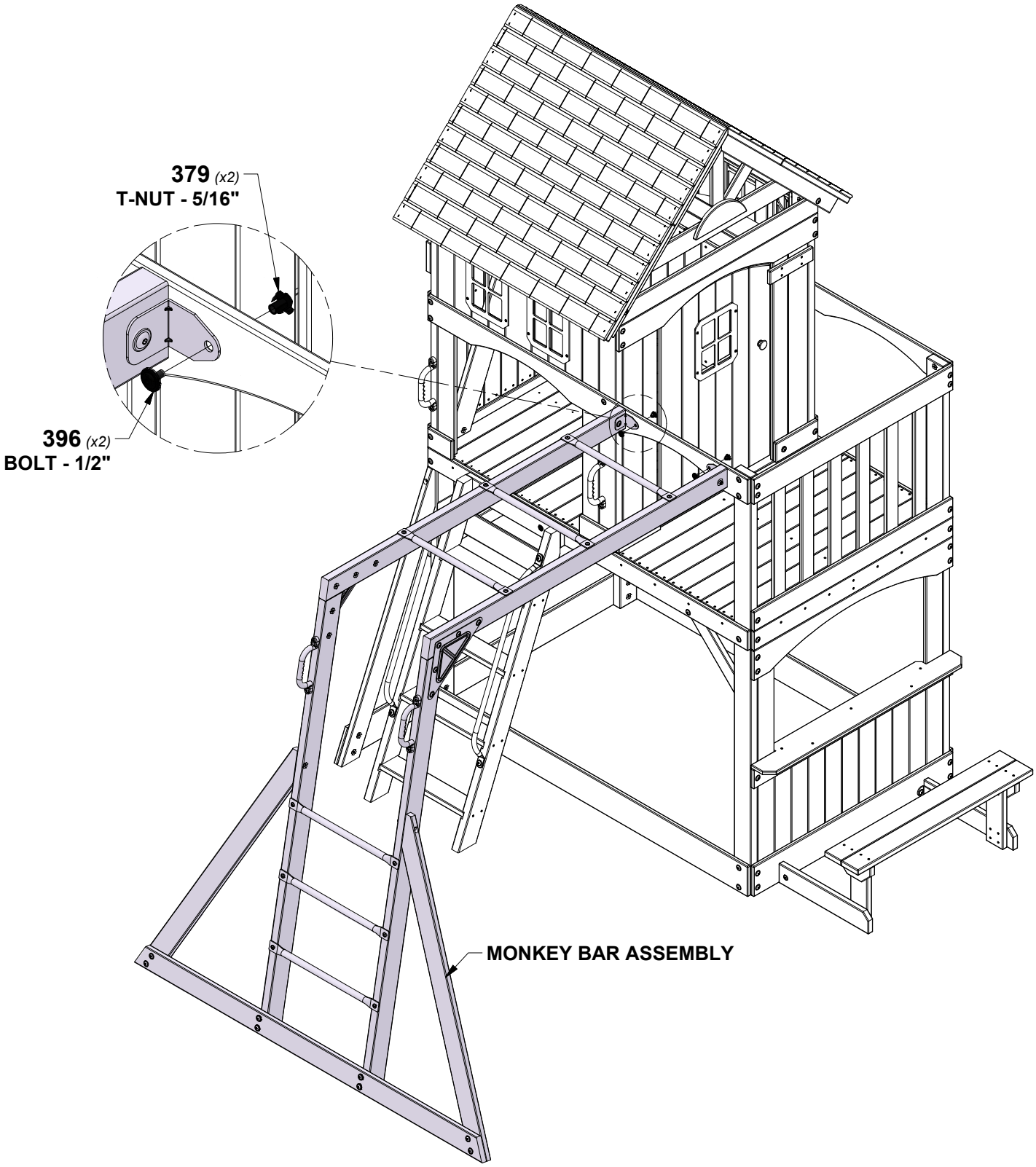

STEP 31 - FORT ASSEMBLY

QTY	PART NUMBER	DESCRIPTION
4	H100379	T-NUT 5/16 BLK
4	H100472	BOLT HEX 5/16x2-3/4 BLK
4	H100477	WASHER SPLIT 5/16 BLK
4	H100478	WASHER FLAT 8x27 BLK

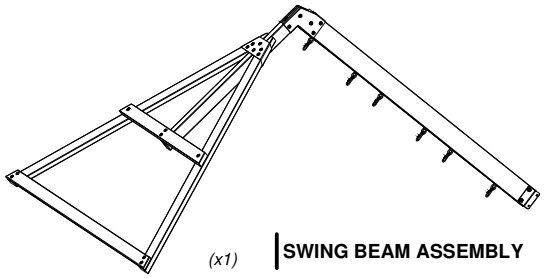

(x1) **SWING BEAM ASSEMBLY**

TIP:
INSTALL T-NUTS IN WOOD FIRST

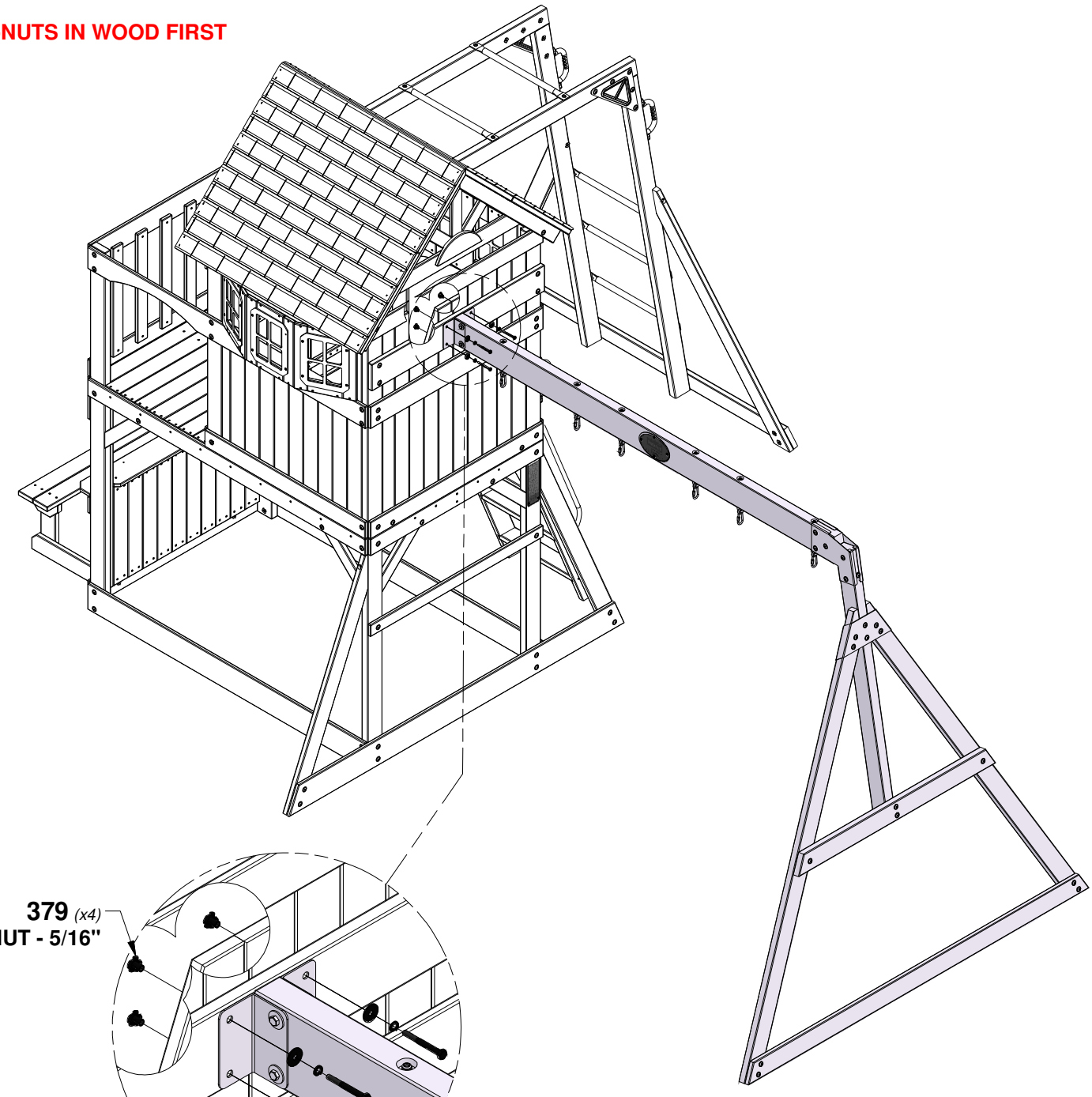

379 *(x4)*
T-NUT - 5/16"

478 *(x4)*
WASHER - 8x27

472 *(x4)*
BOLT - 2 3/4"

477 *(x4)*
WASHER - 5/16

STEP 32 - FORT ASSEMBLY

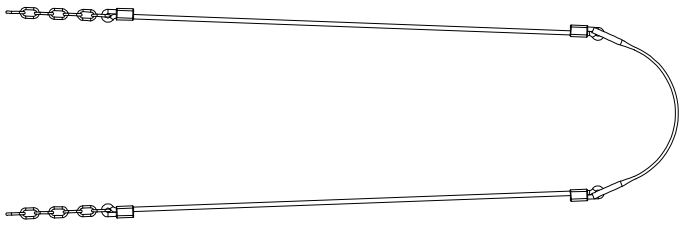

A6P00397 (x2) | ROPE-CHAIN GREEN / SEAT GREEN

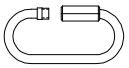

A100069 (x2) | QUICK LINK

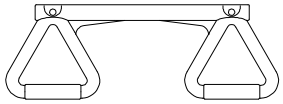

A6P00034 (x1) | TRAPEZE YELLOW

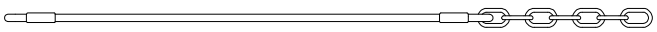

A100083 (x2) | ROPE-CHAIN GREEN 33"

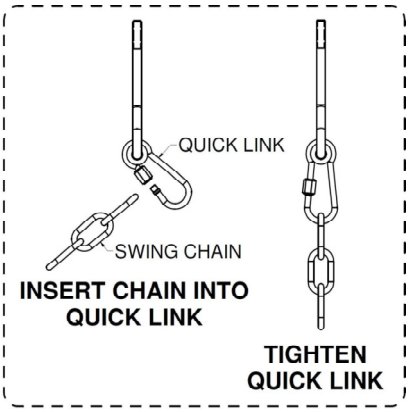

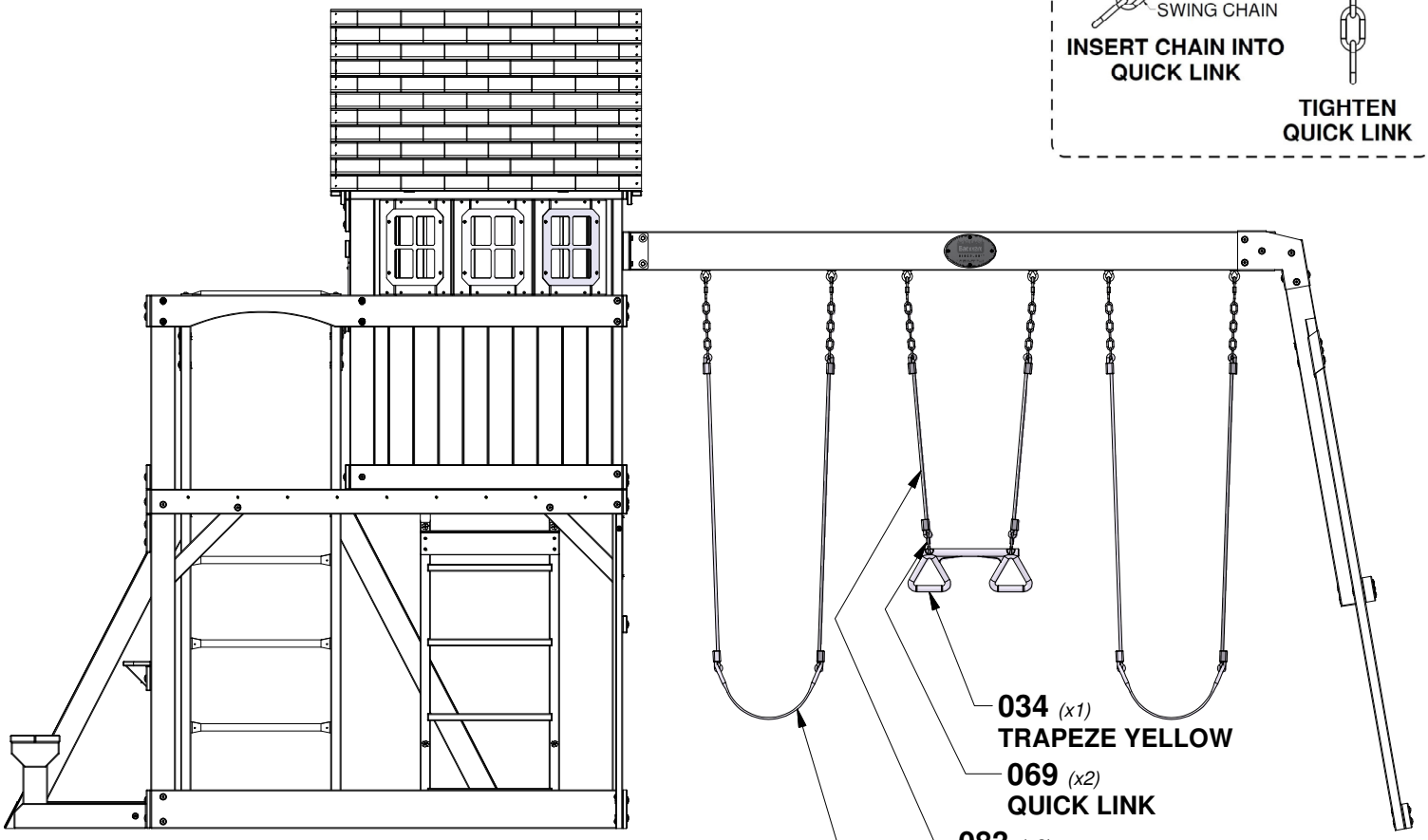

034 (x1)
TRAPEZE YELLOW

069 (x2)
QUICK LINK

083 (x2)
ROPE-CHAIN GREEN 33"

397 (x2)
ROPE-CHAIN GREEN / SEAT GREEN

STEP 1 - SLIDE ASSEMBLY

QTY	PART NUMBER	DESCRIPTION
3	H100074	T-NUT 5/16
3	H100115	BOLT WH 5/16x1/2

A100356 *(x1)* | **SLIDE BED 8' LIGHT GREEN**

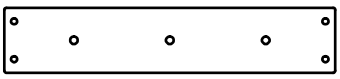

M77 *(x1)* | **SLIDE BRACE - W4L08748**
5/8"x3 3/8"x17 1/4" (16x86x438)

NOTE:TAKE NOTE OF SLIDE BED SURFACE FINISH, THE DULL SIDE WILL BE TOWARDS THE GROUND. PLACE SLIDE BRACE CENTERED ON THE BOTTOM (DULL SIDE) AND 1/2" FROM THE EDGE. USE M77 BOARD AS A TEMPLATE FOR DRILLING BOTTOM HOLE PATTERN IN SLIDE BED. USE A 3/8" DRILL BIT.

TIP:
INSTALL T-NUTS INTO BOARDS BEFORE ASSEMBLY

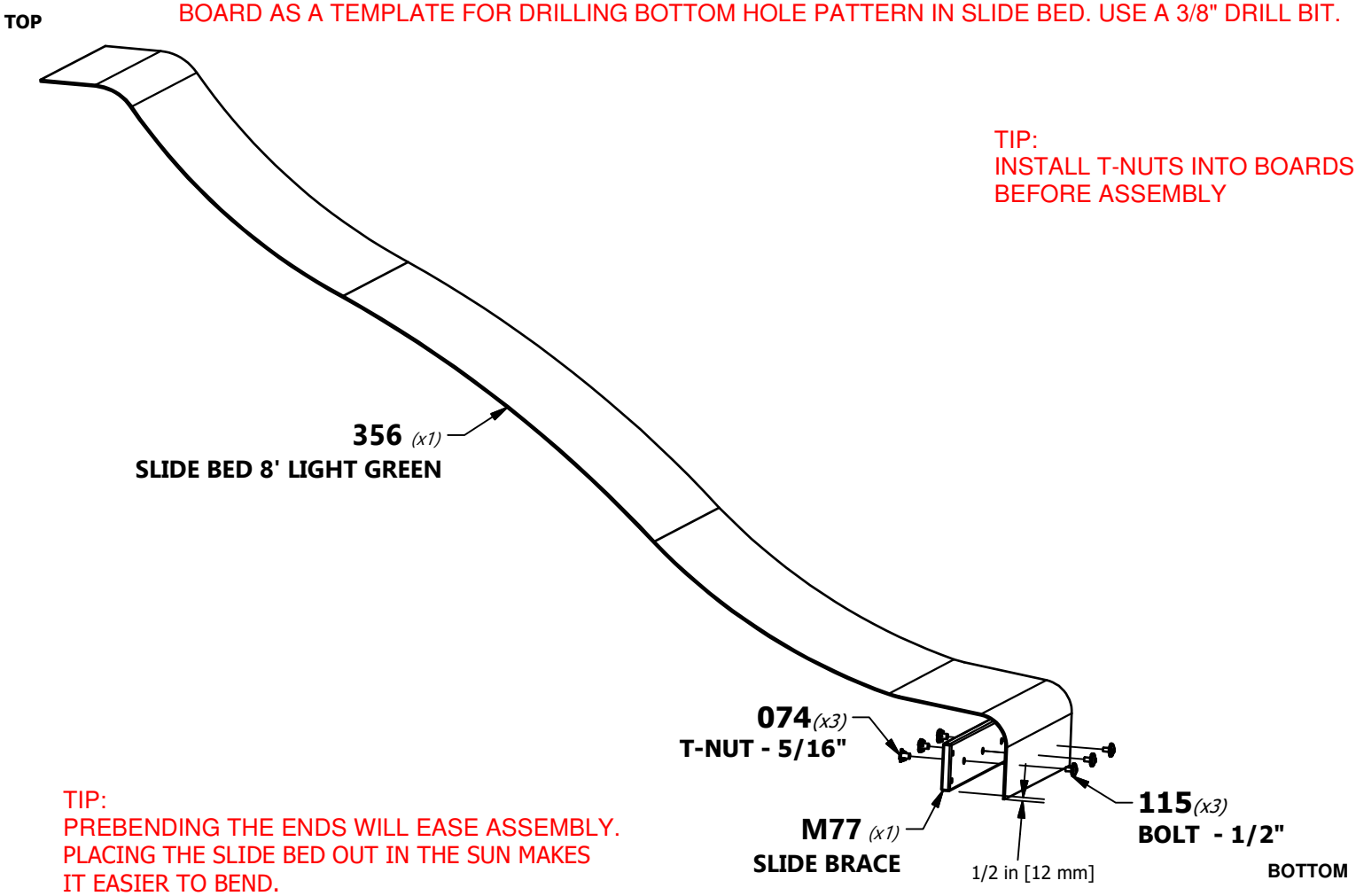

TIP:
PREBENDING THE ENDS WILL EASE ASSEMBLY. PLACING THE SLIDE BED OUT IN THE SUN MAKES IT EASIER TO BEND.

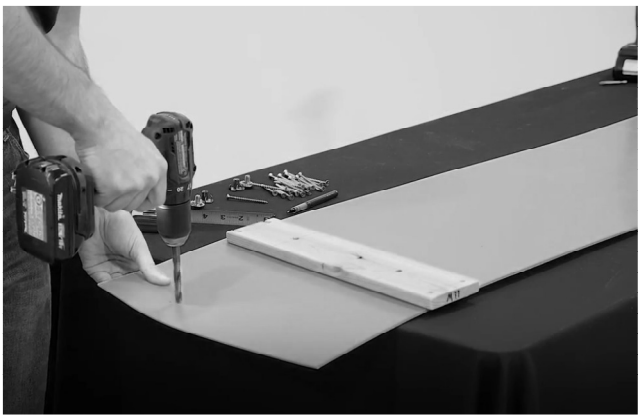

STEP 2 - SLIDE ASSEMBLY

QTY	PART NUMBER	DESCRIPTION
24	H100090	SCREW PFH 8x2 1/2

A100054 *(x1)* | **SLIDE RAIL 8' GREEN RIGHT**

A100055 *(x1)* | **SLIDE RAIL 8' GREEN LEFT**

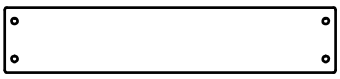

M78 *(x2)* | **CENTER SLIDE BRACE - W4L08749**
5/8"x3 3/8"x17 1/4" (16x86x438)

NOTE:
PLACE THE SLIDE RAIL ON FLAT SURFACE. STARTING AT THE BOTTOM, INSERT THE SLIDE BED INTO THE CHANNEL ON THE INSIDE OF THE RAIL. HOLD THE SLIDE BED IN PLACE WHILE A HELPER BENDS THE SLIDE BED INO THE CHANNEL. MAKE SURE THE SLIDE BED IS COMPLETELY INSERTED INTO THE CHANNEL.

INSERT THE TWO CENTER SLIDE BRACES INTO THEIR RESPECTIVE LOCATIONS. SECURE THE SLIDE BED AND CENTER USING THE PROVIDED HARDWARE.

USING A 1/8" DRILL BIT, DRILL PILOT HOLES IN EACH INDENTATION ALONG EACH SIDE RAIL. THERE SHOULD BE 12 INDENTIONS ON EACH RAIL.

REPEAT THIS PROCESS FOR THE OPPOSITE SLIDE RAIL.

FAILURE TO INSERT SLIDE BED PROPERLY MAY RESULT IN INJURY OR AMPUTATION. EXPOSED SLIDE EDGES CAN BE SHARP AND BECOME A LACERATION HAZARD IF THE SLIDE IS NOT PROPERLY ASSEMBLED.

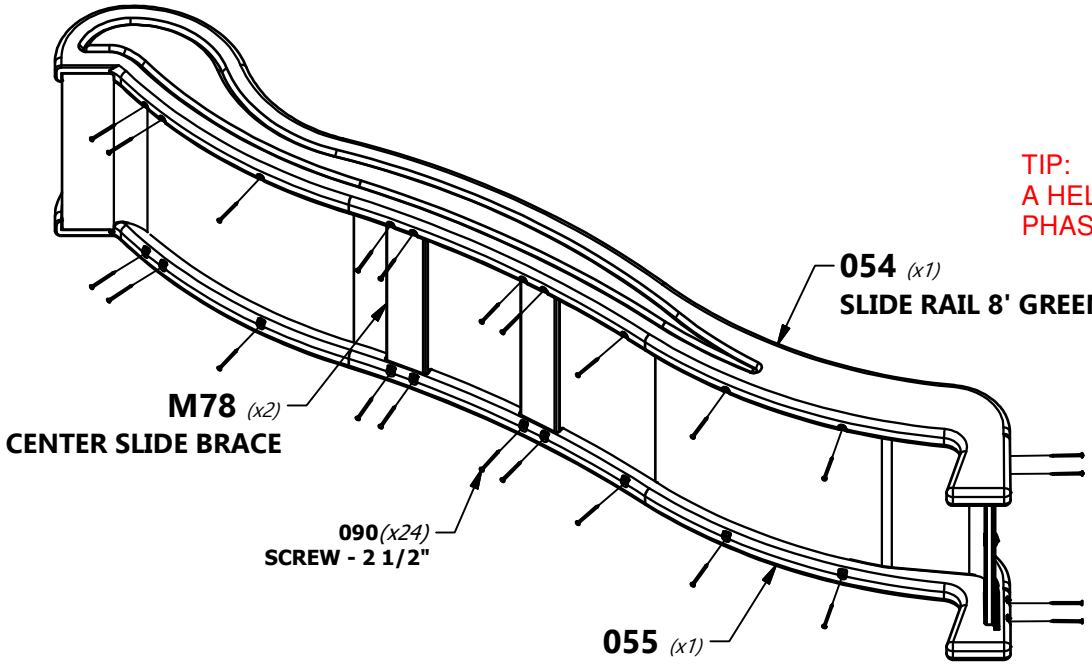

TIP:
A HELPER IS REQUIRED FOR THIS PHASE.

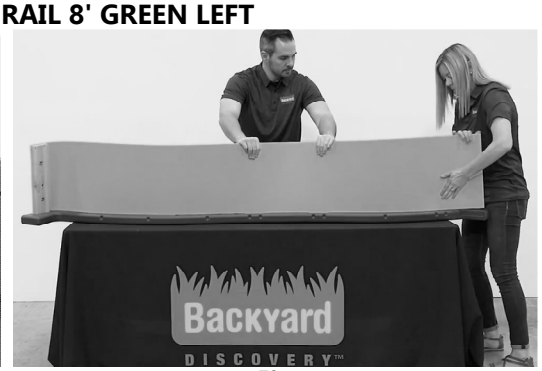

STEP 33 - FORT ASSEMBLY

QTY	PART NUMBER	DESCRIPTION
3	H100074	T-NUT 5/16
3	H100115	BOLT WH 5/16x1/2

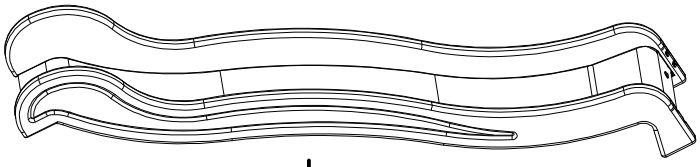

(x1) **SLIDE ASSEMBLY**

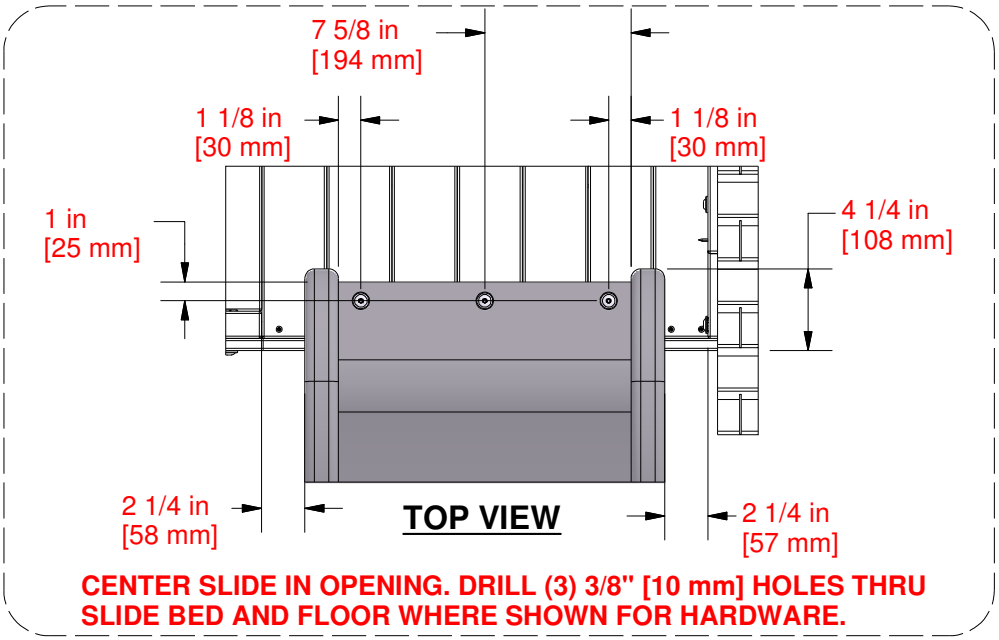

CENTER SLIDE IN OPENING. DRILL (3) 3/8" [10 mm] HOLES THRU SLIDE BED AND FLOOR WHERE SHOWN FOR HARDWARE.

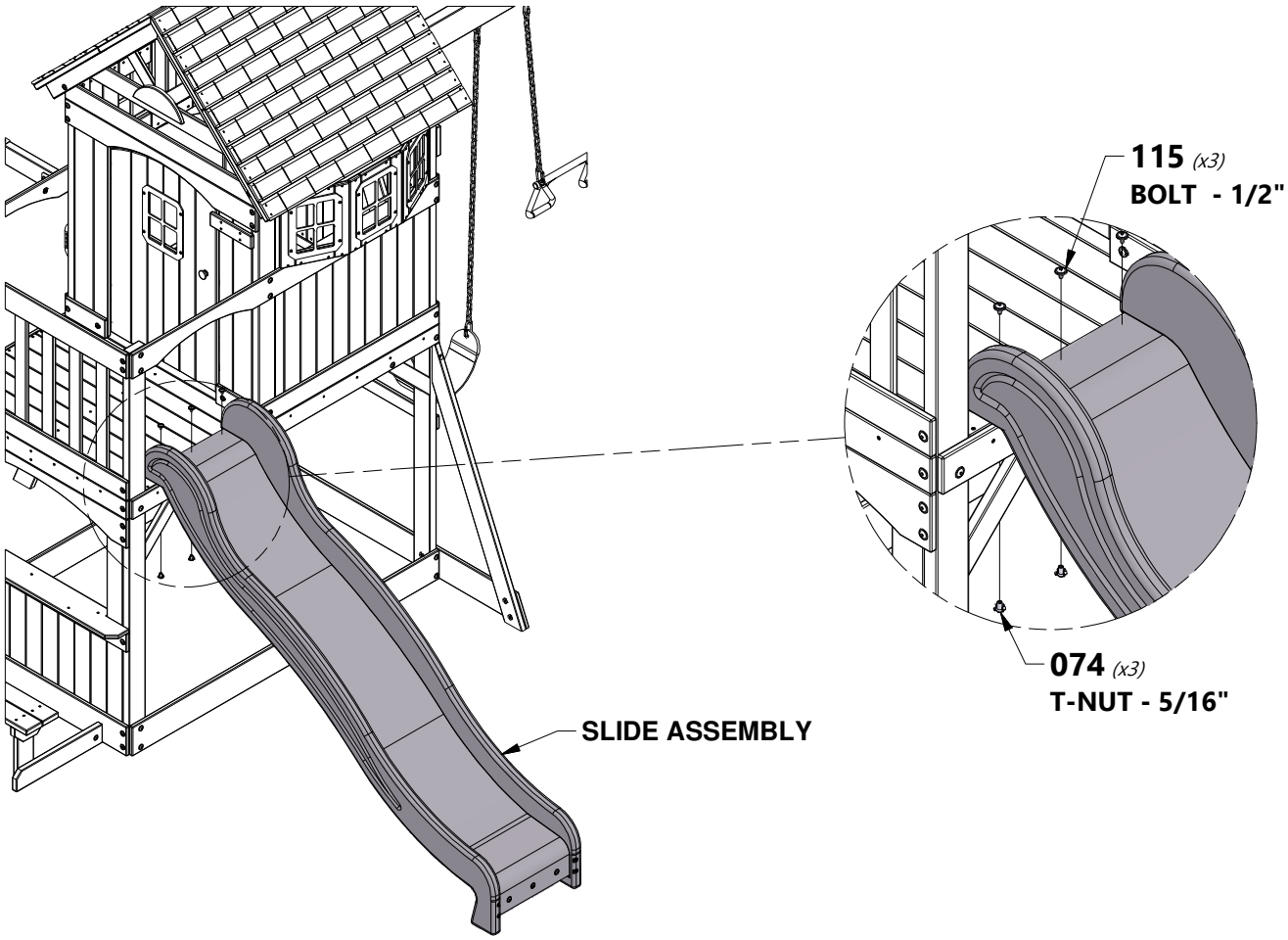

STEP 34 - FORT ASSEMBLY

QTY	PART NUMBER	DESCRIPTION
8	H100199	WASHER LOCK EXT 12x19 BLK
4	H100468	BOLT WH 5/16x1 BLK
8	H100469	NUT BARREL WH 5/16x5/8 BLK
4	H100663	BOLT WH 5/16x3/4 BLK

DETAIL (B)

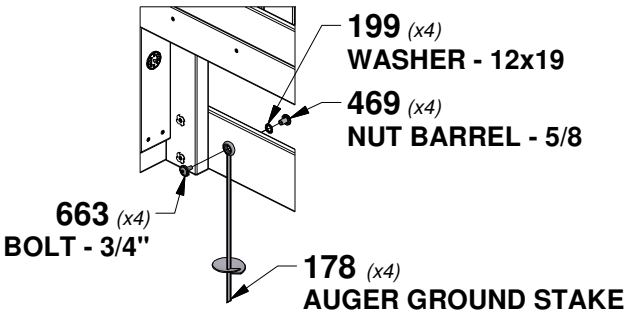

TWIST GROUND STAKE (178) INTO GROUND AT LOCATIONS SHOWN. USING GROUND STAKE AS A GUIDE, DRILL A 3/8" [10mm] HOLE FOR HARDWARE.

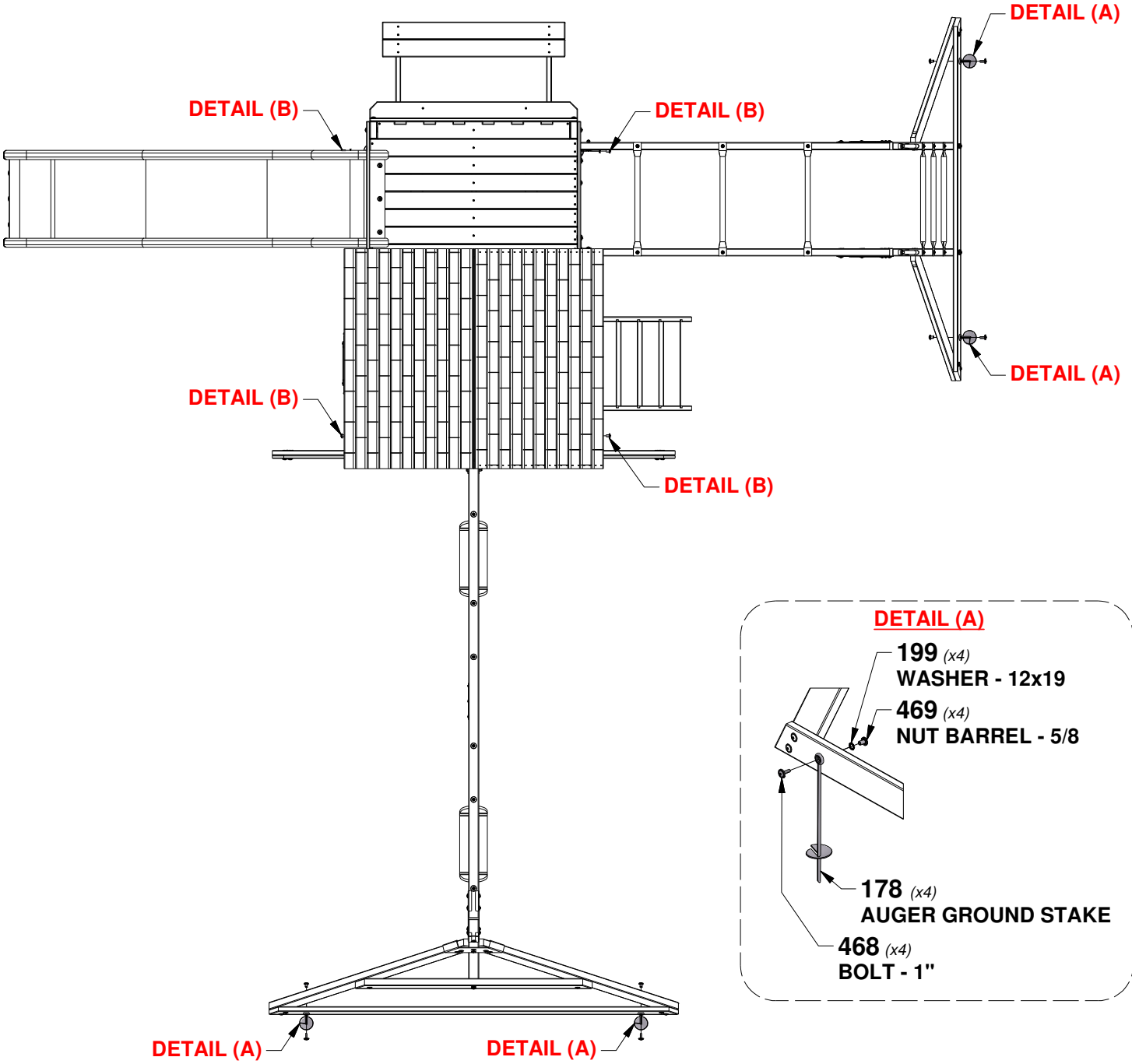

DETAIL (A)